Stop Latch 679, with 4 Locking Positions (4 x 90°)

Stop Latch 679 with Mounting Flange

Materiál: Latch: zinc die-cast, plastic-coated.
Color: orange (RAL 2004), red (RAL 3000), black (RAL 9005).
Locking mechanism: zinc die-cast, plastic.
Mounting flange: zinc die-cast, plastic-coated, black, matte finish.

Retaining Latch with one-sided wing grip, with 4 locking positions, for light-duty applications, designed to hold drawers, flaps, or housing parts without dynamic load.
Equipped with a mounting flange for easy and secure installation.

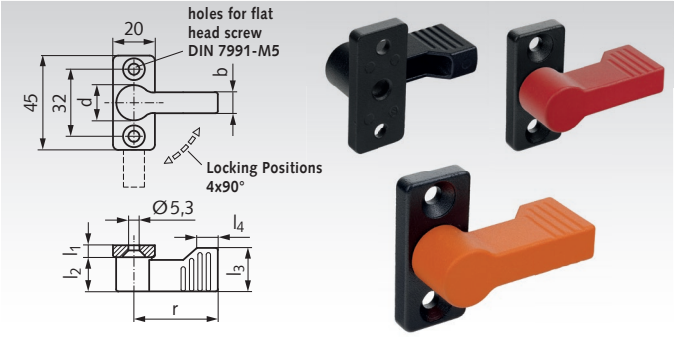

Informácie potrebné na objednanie: napr.: Produkt č. 66667901, stop latch with mounting flange, orange, r = 40mm

Produkt č. orange	Produkt č. red	Produkt č. black	d mm	r mm	b mm	l_1 ≈ mm	l_2 mm	l_3 min. mm	l_4 mm	Hmotnosť g
666 679 01	666 679 03	666 679 05	17	40	10	5,5	16,5	21,5	11	77
666 679 02	666 679 04	666 679 06	17	55	10	5,5	16,5	21,5	11	83

Stop Latch 679 with Internal Thread

Materiál: Latch: zinc die-cast, plastic-coated.
Color: orange (RAL 2004), red (RAL 3000), black (RAL 9005).
Locking mechanism: steel, zinc-plated, blue passivated, plastic.

Retaining Latch with one-sided wing grip, with 4 locking positions, for light-duty applications, designed to hold drawers, flaps, or housing parts without dynamic loads.
With M8 internal thread for easy mounting.

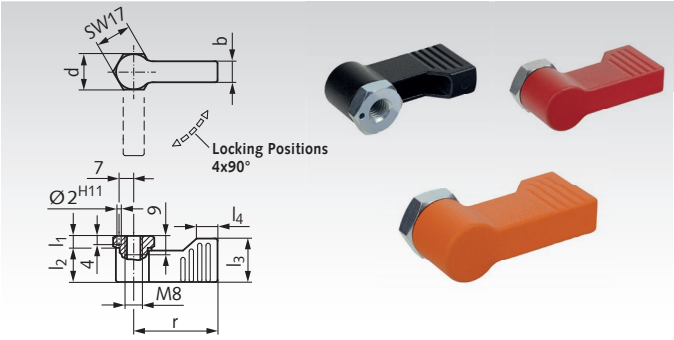

Informácie potrebné na objednanie: napr.: Produkt č. 66667911, stop latch with internal thread, orange, r = 40mm

Produkt č. orange	Produkt č. red	Produkt č. black	d mm	r mm	b mm	l_1 ≈ mm	l_2 mm	l_3 min. mm	l_4 mm	Hmotnosť g
666 679 11	666 679 13	666 679 15	17	40	10	5,5	16,5	21,5	11	58
666 679 12	666 679 14	666 679 16	17	55	10	5,5	16,5	21,5	11	65

Stop Latch 679 with External Thread and Hex Nut

Materiál: Latch: zinc die-cast, plastic-coated.
Color: orange (RAL 2004), red (RAL 3000), black (RAL 9005).
Locking mechanism: steel, zinc-plated, blue passivated, plastic.
Hex nut: steel, zinc-plated.

Retaining Latch with one-sided wing grip, with 4 locking positions, for light-duty applications, designed to hold drawers, flaps, or housing parts without dynamic loads.
The threaded bolt is flattened on four sides to prevent rotation.
Fastening is carried out using the hex nut.

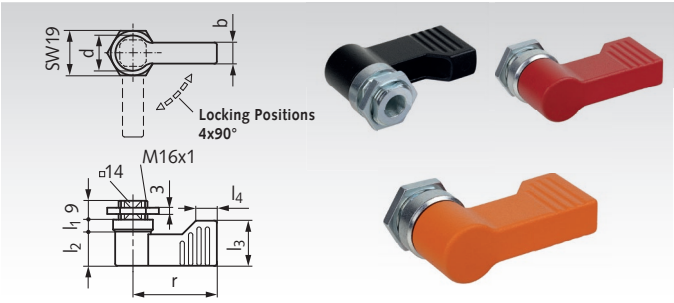

Informácie potrebné na objednanie: napr.: Produkt č. 66667921, stop latch with external thread, orange, r = 40mm

Produkt č. orange	Produkt č. red	Produkt č. black	d mm	r mm	b mm	l_1 ≈ mm	l_2 mm	l_3 min. mm	l_4 mm	Hmotnosť g
666 679 21	666 679 23	666 679 25	17	40	10	5,5	16,5	21,5	11	70
666 679 22	666 679 24	666 679 26	17	55	10	5,5	16,5	21,5	11	76

Mounting Hole for Latch with External Thread

stamping or laser cutting

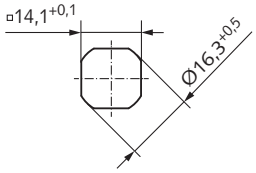

drilling or milling

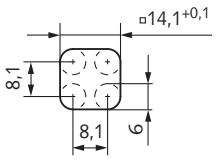
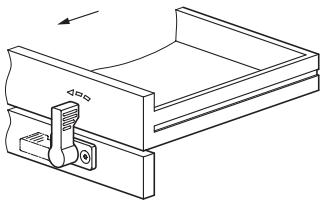
Stop Latch Application Example