MÄDLER®

GEGRÜNDET 1882

143 years of experience - power transmission for your success

New products

in addition to catalogue 43

www.maedler.de

...we keep things moving

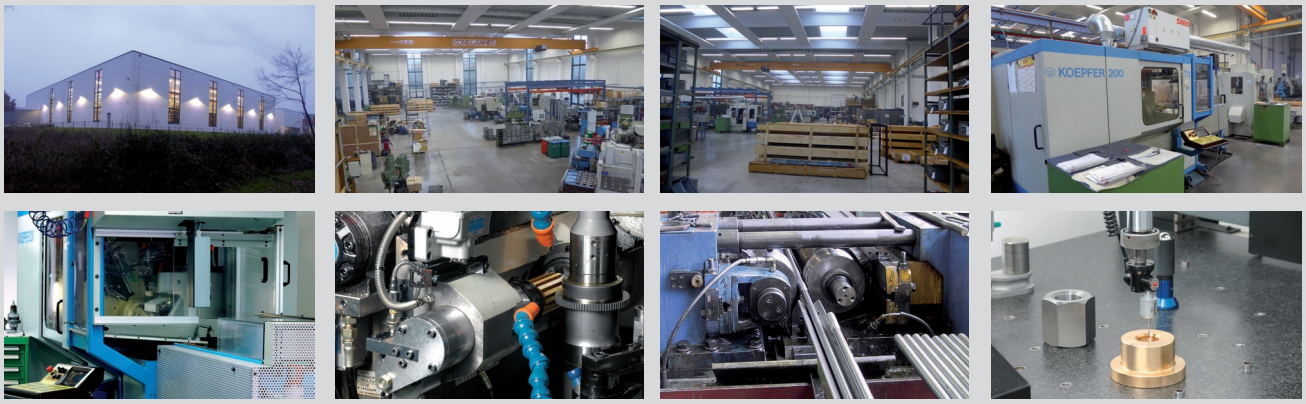

Made in Germany - our factory near Hamburg

Dear Customers,

in many countries around the world, we have responsible distributors to provide you the best service. These partners can be found at www.maedler.de in the section Branch Offices.

For countries without a distributor, please contact:

MAEDLER GmbH
Export-Department
Traenkestrasse 6 - 8
D-70597 Stuttgart
Germany

Phone +49 711 720 95 885
Fax +49 711 720 95 33
export@maedler.de

MÄDLER® branches worldwide

Made in Germany - our factory in Stuttgart

New products additional to MÄDLER® catalogue 43

Stainless Steel Single Row Deep Groove Ball Bearings MÄDLER® (extension) Page 5

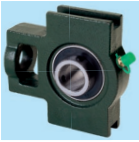
Take-Up Ball Bearing Units UCT (Grey Cast Iron) Page 7

Ball Flange Bearings SBFW (= UBFW, Grey Cast Iron) Page 7

Heavy-Duty Rod Ends GTE / GT-RE Economy-Line, Maintenance Free Page 8

Timing Bars, for Timing Belts Profile T and AT from Steel Page 10

PU Lubricating Gears Page 11

PU Chain Lubrication Pinions Page 13

Single Point Lubrication System perma STAR VARIO Page 14

Hose Connectors, Reducers Page 15

Support for Tensioning Elements or Idlers, Zinc-Plated Page 15

BALLISTOL® Maintenance and Repair Sprays Page 16

SKF® Lubricants and Single-Point Lubricators Page 17

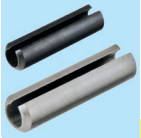
BeStraight Pins, Spring-Type ISO 8752 (formerly DIN 1481) Page 19

Support Pins and Location Pins Page 21

Low Hexagon Nuts ISO 4035 and ISO 8675 Page 22

Self-Locking Nuts U-NUT® Page 22

Hexagon Socket Set Screws ISO 4026 (formerly DIN 913) with Flat Point Page 23

Precision Locknuts MZM with Locking Pins Page 24

Split Hubs / Clamp Hubs Page 24

Spring Plungers with Bolt from Plastic, with Internal Hexagon Page 25

Spring Plungers with Bolt from Plastic, with Internal Hexagon, Strong Spring Tension Page 25

Precision Levelling Elements Page 26

Assembly Tools for Precision Levelling Elements Page 26

Countersunk Washers Page 27

Captive C-Washers DIN 6371 Page 28

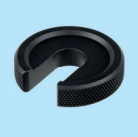
C-Washers similar to DIN 6372 Page 28

Shackles, straight, Commercial Version Page 29

Shackles, curved, Commercial Version Page 29

Bevel Gearboxes KEK Version B Page 30

Linear Bearings KB-3-SSK ISO Series 3, Closed Design, Stainless Steel, with plastic cage Page 31

Linear Bearings KB-3-SSS ISO Series 3, Closed Design, Stainless Steel Page 31

Linear Bearings KB-3-STS ISO Series 3, Closed Design Page 32

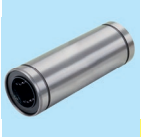
Tandem Linear Bearings KBT-ST, Closed, Long Design Page 32

Tandem Linear Bearings KBT-ST-FM with central, round Flange, Long Design Page 33

Tandem Linear Bearings KBT-ST-VM with central Square Flange, Long Design Page 33

Linear Bearings Units KG-3-K ISO Series 3, Easy-Line, Short Version, Closed or Open Design Page 34

Linear Bearing Units KG-3-FTST Closed, Long Flange Version Page 35

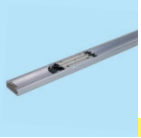
Linear Motion Guide DA 0118 RC with Ball Carriage, Track Width 50 mm Page 36

Linear Motion Guides LA 1815 for light loads Page 37

Slides with Full Extension, Over Extension Page 38

Compact Linear Axes Page 42

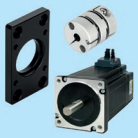
Equipment and Mounting Parts for Compact Linear Axes Page 46

Apparatus Castors with Perforated Plate, Rubber Bandage TPE, Light Version, Electrically Conductive Page 48

Apparatus Castors with Back Hole, Rubber Bandage TPE, Light Version, Electrically Conductive Page 49

Heat-resistant Stainless Steel Transport Castors with Perforated Plate, Thermoplastic Compound Page 50

Stainless Steel Transport Castors with Perforated Plate, PU Bandage Page 51

Heavy Duty Transport Castors with Perforated Plate, White Plastic Wheel Page 52

Heavy Duty Transport Castors with Perforated Plate, PU Bandage Page 53

Super Heavy Duty Transport Castors with Perforated Plate, PU Bandage
Page 54

Universal Rollers
Page 55

Roller Stands
Page 55

Simple Thrust Ball Bearings
Page 55

Tsubaki Single-Strand Roller Chains GT4 Winner DIN ISO 606, Premium
Page 56

Tsubaki Single-Strand Roller Chains Lambda DIN ISO 606, Self-Lubricating, Premium
Page 57

Tsubaki Single-Strand Roller Chains Neptune DIN ISO 606, Corrosion Proof
Page 58

Tsubaki Single-Strand Roller Chains Lambda-Neptune™ DIN ISO 606, Self-Lubricating, Corrosion Proof
Page 59

Tsubaki Single-Strand Roller Chains Similar to DIN ISO 606, Stainless Steel, Premium
Page 60

Tsubaki Single-Strand Roller Chains Titan DIN ISO 606, for Abrasive Environment
Page 61

Tsubaki Double-Strand Roller Chains GT4 Winner DIN ISO 606, Premium
Page 62

Tsubaki Double-Strand Roller Chains Lambda DIN ISO 606, Self-Lubricating, Premium
Page 63

Tsubaki Double-Strand Roller Chains Neptune™ DIN ISO 606, Corrosion Proof
Page 64

Double-Strand Roller Chains similar to DIN ISO 606, Stainless Steel, Premium
Page 65

Tsubaki Triple-Strand Roller Chains GT4 Winner DIN ISO 606, Premium
Page 66

Single-Strand Roller Chains ANSI DIN ISO 606, Premium
Page 67

Single-Strand Roller Chains ANSI Lambda DIN ISO 606, Self-Lubricating, Premium
Page 68

Single-Strand Roller Chains similar to ANSI DIN ISO 606), Stainless Steel, Premium
Page 69

Double-Strand Roller Chains ANSI DIN ISO 606, Premium
Page 70

Double-Strand Roller Chains similar to ANSI DIN ISO 606, Stainless Steel, Premium
Page 71

Sprockets KRS with One-Sided Hub, ANSI 25-1 to 80-1
Page 72

Plate Wheels KRL, ANSI 35-1, 40-1, 60-1, 80-1
Page 73

Double-Strand Sprockets ZRS with One-Sided Hub, ANSI 35-2 to 80-2
Page 78

Double-Strand Plate Wheels ZRL, ANSI 40-2, 50-2
Page 79

You can find the complete programme at www.maedler.de

Special parts / Custom-made parts

Are you looking for a part that's not in the catalogue?
We can also supply parts other than those listed.
Apart from this, we can also produce special parts according to drawing or customer specification. Please contact us.

Stainless Steel Single Row Deep Groove Ball Bearings MÄDLER®, Inner Diameter 3 - 15 mm

Material: Stainless steel AISI 420C. Up to inner Ø 9mm lubricated with special grease SRL, for precision devices. From inner Ø 10mm lubricated with grease FM 222 for food processing machinery, with FDA, CIFA, KPF2K-20, NSF H1 registration.

- Stainless ball bearings in high quality, in common design.
- Usable for high speed.
- On choice: With friction-free metal shields ZZ (= 2Z) or with contacting, blue NBR rubber seals 2RS.

Temperature range: -20°C to +90°C (for short time up to +110°C).
Clearance: CN, normal bearing play. **Other types on request.**

Ordering Details: e.g.: Product No. SS-623-ZZ-MAE, Stainless Ball Bearing

Product No. Stainless	Main dimensions d mm	D mm	B mm	Version	Lubricate	Load rating radial dyn.C kN	stat.C_0 kN	Speed limit min^{-1}	Weight g
SS-623-ZZ-MAE	3	10	4	shielded on both sides	SRL	0,4	0,1	47.000	1,7
SS-623-2RS-MAE	3	10	4	sealed on both sides	SRL	0,4	0,1	23.000	1,7
SS-604-ZZ-MAE	4	12	4	shielded on both sides	SRL	0,6	0,1	45.000	2,3
SS-604-2RS-MAE	4	12	4	sealed on both sides	SRL	0,6	0,1	22.000	2,3
SS-624-ZZ-MAE	4	13	5	shielded on both sides	SRL	1,0	0,2	38.000	3
SS-624-2RS-MAE	4	13	5	sealed on both sides	SRL	1,0	0,2	19.000	3
SS-685-ZZ-MAE	5	11	5	shielded on both sides	SRL	0,4	0,1	42.000	2
SS-685-2RS-MAE	5	11	5	sealed on both sides	SRL	0,4	0,1	21.000	2
SS-605-ZZ-MAE	5	14	5	shielded on both sides	SRL	1,0	0,3	38.000	3,5
SS-605-2RS-MAE	5	14	5	sealed on both sides	SRL	1,0	0,3	19.000	3,5
SS-625-ZZ-MAE	5	16	5	shielded on both sides	SRL	1,3	0,3	34.000	4,9
SS-625-2RS-MAE	5	16	5	sealed on both sides	SRL	1,3	0,3	17.000	4,9
SS-686-ZZ-MAE	6	13	5	shielded on both sides	SRL	0,7	0,2	38.000	3
SS-686-2RS-MAE	6	13	5	sealed on both sides	SRL	0,7	0,2	19.000	3
SS-696-ZZ-MAE	6	15	5	shielded on both sides	SRL	1,0	0,3	38.000	4,3
SS-696-2RS-MAE	6	15	5	sealed on both sides	SRL	1,0	0,3	19.000	4,3
SS-606-ZZ-MAE	6	17	6	shielded on both sides	SRL	1,7	0,5	36.000	6,6
SS-606-2RS-MAE	6	17	6	sealed on both sides	SRL	1,7	0,5	18.000	6,6
SS-626-ZZ-MAE	6	19	6	shielded on both sides	SRL	1,8	0,5	30.000	7,9
SS-626-2RS-MAE	6	19	6	sealed on both sides	SRL	1,8	0,5	15.000	7,9
SS-687-ZZ-MAE	7	14	5	shielded on both sides	SRL	0,8	0,3	38.000	3,4
SS-687-2RS-MAE	7	14	5	sealed on both sides	SRL	0,8	0,3	19.000	3,4
SS-607-ZZ-MAE	7	19	6	shielded on both sides	SRL	1,8	0,5	34.000	7,5
SS-607-2RS-MAE	7	19	6	sealed on both sides	SRL	1,8	0,5	17.000	7,5
SS-627-ZZ-MAE	7	22	7	shielded on both sides	SRL	2,5	0,1	28.000	12,9
SS-627-2RS-MAE	7	22	7	sealed on both sides	SRL	2,5	0,1	14.000	12,9
SS-688-ZZ-MAE	8	16	5	shielded on both sides	SRL	0,9	0,3	34.000	4,5
SS-688-2RS-MAE	8	16	5	sealed on both sides	SRL	0,9	0,3	17.000	4,5
SS-698-ZZ-MAE	8	19	6	shielded on both sides	SRL	1,7	0,6	34.000	8,3
SS-698-2RS-MAE	8	19	6	sealed on both sides	SRL	1,7	0,6	17.000	8,3
SS-608-ZZ-MAE	8	22	7	shielded on both sides	SRL	2,5	0,9	32.000	12,2
SS-608-2RS-MAE	8	22	7	sealed on both sides	SRL	2,5	0,9	16.000	12,2
SS-609-ZZ-MAE	9	24	7	shielded on both sides	SRL	2,6	1,0	30.000	14,7
SS-609-2RS-MAE	9	24	7	sealed on both sides	SRL	2,6	1,0	15.000	14,7
SS-629-ZZ-MAE	9	26	8	shielded on both sides	SRL	3,6	1,4	26.000	19,3
SS-629-2RS-MAE	9	26	8	sealed on both sides	SRL	3,6	1,4	13.000	19,3
SS-61800-2RS-MAE	10	19	5	sealed on both sides	FM 222	1,5	0,7	22.000	5
SS-61900-2RS-MAE	10	22	6	sealed on both sides	FM 222	2,2	1,0	19.000	10
SS-6000-ZZ-MAE	10	26	8	shielded on both sides	FM 222	3,6	1,4	29.000	19
SS-6000-2RS-MAE	10	26	8	sealed on both sides	FM 222	3,6	1,4	14.000	19
SS-6200-ZZ-MAE	10	30	9	shielded on both sides	FM 222	4,0	1,8	22.000	32
SS-6200-2RS-MAE	10	30	9	sealed on both sides	FM 222	4,0	1,8	11.000	32
SS-6300-2RS-MAE	10	35	11	sealed on both sides	FM 222	7,4	3,1	13.000	53
SS-61801-ZZ-MAE	12	21	5	shielded on both sides	FM 222	1,5	0,8	18.500	6
SS-61801-2RS-MAE	12	21	5	sealed on both sides	FM 222	1,5	0,8	18.500	6
SS-61901-2RS-MAE	12	24	6	sealed on both sides	FM 222	2,3	1,2	17.500	11
SS-6001-ZZ-MAE	12	28	8	shielded on both sides	FM 222	4,0	1,8	25.000	22
SS-6001-2RS-MAE	12	28	8	sealed on both sides	FM 222	4,0	1,8	12.000	22
SS-6201-ZZ-MAE	12	32	10	shielded on both sides	FM 222	5,4	2,2	20.000	37
SS-6201-2RS-MAE	12	32	10	sealed on both sides	FM 222	5,4	2,2	10.000	37
SS-6301-2RS-MAE	12	37	12	sealed on both sides	FM 222	8,7	3,8	12.000	60
SS-61802-2RS-MAE	15	24	5	sealed on both sides	FM 222	1,7	1,0	15.000	7
SS-61902-ZZ-MAE	15	28	7	shielded on both sides	FM 222	3,3	1,6	14.500	17
SS-61902-2RS-MAE	15	28	7	sealed on both sides	FM 222	3,3	1,6	14.500	17
SS-6002-ZZ-MAE	15	32	9	shielded on both sides	FM 222	4,4	2,0	21.000	30
SS-6002-2RS-MAE	15	32	9	sealed on both sides	FM 222	4,4	2,0	10.000	30
SS-6202-ZZ-MAE	15	35	11	shielded on both sides	FM 222	6,0	2,8	19.000	45
SS-6202-2RS-MAE	15	35	11	sealed on both sides	FM 222	6,0	2,8	9.000	45

Stainless Steel Single Row Deep Groove Ball Bearings MÄDLER®, Inner Diameter 17 - 45 mm

Material: Stainless steel AISI 420C. Up to inner Ø 9mm lubricated with special grease SRL, for precision devices. From inner Ø 10mm lubricated with grease FM 222 for food processing machinery, with FDA, CIFA, KPF2K-20, NSF H1 registration.

- Stainless ball bearings in high quality, in common design.
- Usable for high speed.
- On choice: With friction-free metal shields ZZ (= 2Z) or with contacting, blue NBR rubber seals 2RS.

Temperature range: -20°C to +90°C (for short time up to +110°C).
Clearance: CN, normal bearing play. **Other types on request.**

Ordering Details: e.g.: Product No. SS-61803-2RS-MAE, Stainless Ball Bearing

Product No. Stainless	Main dimensions d mm	D mm	B mm	Version	Lubricate	Load rating radial dyn.C kN	stat.C_0 kN	Speed limit min^{-1}	Weight g
SS-61803-2RS-MAE	17	26	5	sealed on both sides	FM 222	1,8	1,1	13.000	8
SS-61903-2RS-MAE	17	30	7	sealed on both sides	FM 222	3,7	2,1	12.000	18
SS-6003-ZZ-MAE	17	35	10	shielded on both sides	FM 222	4,7	2,4	19.000	39
SS-6003-2RS-MAE	17	35	10	sealed on both sides	FM 222	4,7	2,4	9.000	39
SS-6203-ZZ-MAE	17	40	12	shielded on both sides	FM 222	7,6	3,6	16.000	65
SS-6203-2RS-MAE	17	40	12	sealed on both sides	FM 222	7,6	3,6	8.000	65
SS-61804-2RS-MAE	20	32	7	sealed on both sides	FM 222	2,8	1,8	11.200	18
SS-61904-2RS-MAE	20	37	9	sealed on both sides	FM 222	5,1	3,0	10.500	36
SS-6004-ZZ-MAE	20	42	12	shielded on both sides	FM 222	7,5	3,8	16.000	69
SS-6004-2RS-MAE	20	42	12	sealed on both sides	FM 222	7,5	3,8	8.000	69
SS-6204-ZZ-MAE	20	47	14	shielded on both sides	FM 222	10,3	5,0	14.000	110
SS-6204-2RS-MAE	20	47	14	sealed on both sides	FM 222	10,3	5,0	7.000	110
SS-6304-2RS-MAE	20	52	15	sealed on both sides	FM 222	14,3	7,1	8.000	144
SS-61805-ZZ-MAE	25	37	7	shielded on both sides	FM 222	3,4	2,1	8.500	22
SS-61805-2RS-MAE	25	37	7	sealed on both sides	FM 222	3,4	2,1	8.500	22
SS-61905-2RS-MAE	25	42	9	sealed on both sides	FM 222	5,6	3,6	8.400	41
SS-6005-ZZ-MAE	25	47	12	shielded on both sides	FM 222	8,0	4,3	14.000	80
SS-6005-2RS-MAE	25	47	12	sealed on both sides	FM 222	8,0	4,3	7.000	80
SS-6205-ZZ-MAE	25	52	15	shielded on both sides	FM 222	11,3	6,9	12.000	130
SS-6205-2RS-MAE	25	52	15	sealed on both sides	FM 222	11,3	6,9	6.000	130
SS-6305-2RS-MAE	25	62	17	sealed on both sides	FM 222	19,0	9,8	6.500	232
SS-61806-2RS-MAE	30	42	7	sealed on both sides	FM 222	3,5	2,3	7.500	26
SS-61906-2RS-MAE	30	47	9	sealed on both sides	FM 222	5,8	4,0	7.200	45
SS-6006-ZZ-MAE	30	55	13	shielded on both sides	FM 222	10,6	6,2	12.000	120
SS-6006-2RS-MAE	30	55	13	sealed on both sides	FM 222	10,6	6,2	6.000	120
SS-6206-ZZ-MAE	30	62	16	shielded on both sides	FM 222	15,6	8,5	10.000	200
SS-6206-2RS-MAE	30	62	16	sealed on both sides	FM 222	15,6	8,5	5.000	200
SS-61807-2RS-MAE	35	47	7	sealed on both sides	FM 222	3,2	2,6	6.500	30
SS-61907-2RS-MAE	35	55	10	sealed on both sides	FM 222	9,0	6,0	6.200	73
SS-6007-ZZ-MAE	35	62	14	shielded on both sides	FM 222	14,4	9,3	5.000	155
SS-6007-2RS-MAE	35	62	14	sealed on both sides	FM 222	14,4	9,3	5.000	155
SS-6207-2RS-MAE	35	72	17	sealed on both sides	FM 222	23,0	13,8	5.000	288
SS-61808-2RS-MAE	40	52	7	sealed on both sides	FM 222	3,6	3,2	5.500	33
SS-61908-2RS-MAE	40	62	12	sealed on both sides	FM 222	11,7	8,2	5.200	112
SS-6008-2RS-MAE	40	68	15	sealed on both sides	FM 222	15,1	10,3	4.800	192
SS-6208-2RS-MAE	40	80	18	sealed on both sides	FM 222	26,2	16,0	4.500	366
SS-61809-2RS-MAE	45	58	7	sealed on both sides	FM 222	3,9	3,8	7.500	40
SS-61909-2RS-MAE	45	68	12	sealed on both sides	FM 222	12,1	10,8	6.000	132
SS-6009-2RS-MAE	45	75	16	sealed on both sides	FM 222	20,8	14,6	4.480	245
SS-6209-2RS-MAE	45	85	19	sealed on both sides	FM 222	29,4	18,1	4.240	407

Take-Up Ball Bearing Units UCT (Grey Cast Iron)

Material: Housing from grey cast iron. Rolling bearing from bearing steel.

These T-take up roller bearing units are typically used in clamping fixtures between rails/guides and mounting frames. The rolling bearing can be swiveled when mounting to compensate shaft misalignment. The shaft will get fastened with 2 setscrews. Lubricated for life at normal operating conditions. Re-lubricating is possible.

Delivery with grease nipple.

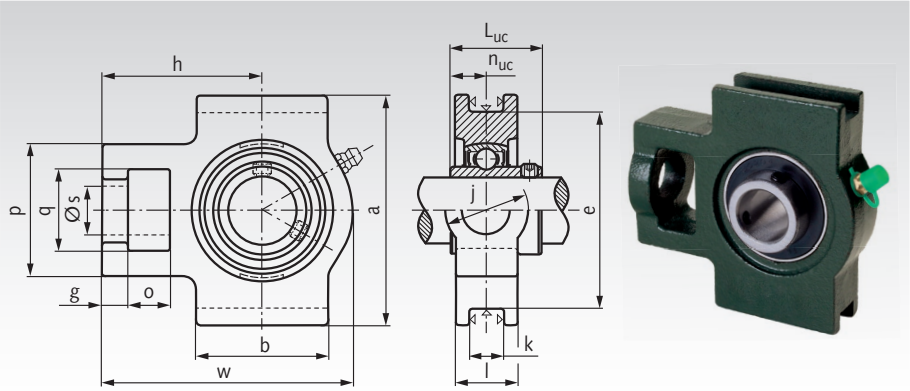

Ordering Details: e.g.: Product No. 62541200, Take-Up Bearing Unit UCT 201, Bore 12mm

Product-No.	UCT No.	Bore mm	a mm	b mm	e mm	g mm	h mm	j mm	k mm	l mm	o mm	p mm	q mm	s mm	w mm	L_{uc} mm	n_{uc} mm	Bearing-Load Rating* dyn. C kN	stat.C_0 kN	Weight kg
625 412 00	201	12	89	51	76	10	61	32	12	21	16	51	32	19	94	31	12,7	9,9	6,2	0,79
625 415 00	202	15	89	51	76	10	61	32	12	21	16	51	32	19	94	31	12,7	9,9	6,2	0,78
625 417 00	203	17	89	51	76	10	61	32	12	21	16	51	32	19	94	31	12,7	9,9	6,2	0,76
625 420 00	204	20	89	51	76	10	61	32	12	21	16	51	32	19	94	31	12,7	9,9	6,2	0,74
625 425 00	205	25	89	51	76	10	62	32	12	24	16	51	32	19	97	34,1	14,3	10,8	7,0	0,83
625 430 00	206	30	102	57	89	10	70	37	12	28	16	56	37	22	113	38,1	15,9	15,1	10,0	1,3
625 435 00	207	35	102	64	89	13	78	37	12	30	16	64	37	22	129	42,9	17,5	19,9	13,7	1,6
625 440 00	208	40	114	83	102	16	88	49	16	33	19	83	49	29	144	49,2	19	22,6	15,7	2,4
625 445 00	209	45	117	83	102	16	87	49	16	35	19	83	49	29	144	49,2	19	25,2	17,8	2,4
625 450 00	210	50	117	86	102	16	90	49	16	37	19	83	49	29	149	51,6	19	27,1	19,7	2,5

* Maximum radial load if axial force = 0.
The axial load rating is approx. 20% of the radial load rating.

Ball Flange Bearings SBFW (= UBFW, Grey Cast Iron)

Material: Housing from grey cast iron. Rolling bearing from bearing steel.

The rolling bearing can be swiveled when mounting to compensate shaft misalignment. The shaft will get fastened with 2 setscrews. Lubricated for life at normal operating conditions. Re-lubricating is possible.

Delivery with grease nipple.

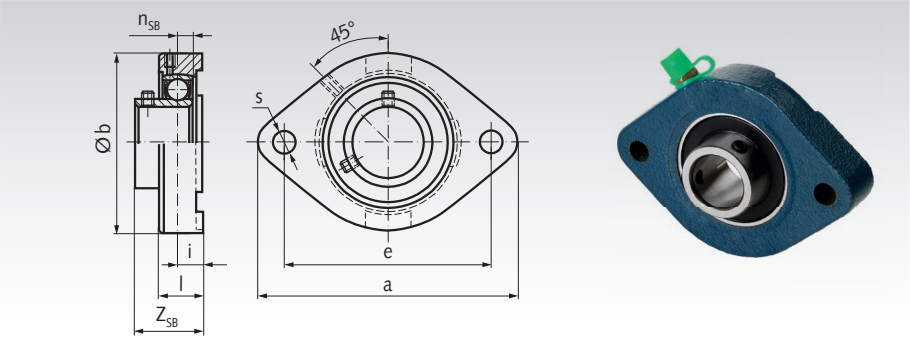

Ordering Details: e.g.: Product No. 62681500, Ball Flange Bearing SBFW 202, Bore 15mm

Product-No.	SBFW No.	Bore mm	a mm	b mm	e mm	i mm	l mm	s mm	Z_{SB} mm	n_{SB} mm	Bearing-Load Rating* dyn. C kN	stat.C_0 kN	Weight kg
626 815 00	202	15	81	59	63,5	7,5	15	7	23,5	6	8,2	4,1	0,29
626 817 00	203	17	81	59	63,5	7,5	15	7	23,5	6	8,2	4,1	0,28
626 820 00	204	20	90,5	66,5	71,4	9,5	17	10	27,5	7	10,9	5,7	0,38
626 825 00	205	25	97	71	76,2	9,5	17,5	10	29	7,5	11,9	6,7	0,46
626 830 00	206	30	112,5	84	90,5	10	21	12	32,0	8	16,6	9,6	0,71
626 835 00	207	35	126	94	100	10	22	12	33,5	8,5	21,8	13,1	0,95
626 840 00	208	40	148	104	119	14,5	25	14	39,5	9	27,2	15,1	1,20

* Maximum radial load if axial force = 0.
The axial load rating is approx. 20% of the radial load rating.

Heavy-Duty Rod Ends GTE Economy-Line, Maintenance Free, Internal Thread

Material housing: Steel C45 (AISI 1045) forged, zinc-plated.
Material outer ring: Steel with PTFE-lining.
Material inner ring: Steel 105Cr4 (AISI 52100), hardened, ground and polished.
DIN ISO 12240-4 (DIN 648) dimensional series K and/or DIN ISO 8139 / CETOP RP 103 P, see footnote.
For high, radial and axial alternating loads.
Sliding speeds up to 10 m/min.
Load tables catalogue 43 pages 800 - 801 GT and GT-R.

IR = Internal Right-hand thread. **IL =** Internal Left-hand thread.

Ordering Details: e.g.: Product No. 63260500E, Rod End GTE, IR

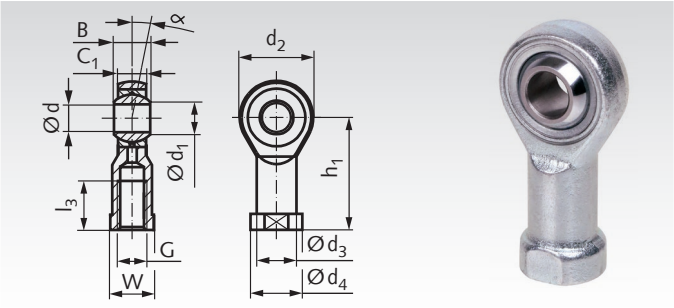

Product No. IR	Product No. IL	d^{H7} mm	$B^{-0.12}$ mm	$C_1^{\pm 0.5}$ mm	d_1 mm	d_2^{max} mm	$d_3 \approx$ mm	d_4^{max} mm	h_1 mm	l_3^{min} mm	Thread ISO DIN 13 6H G mm	W mm	Tilting angle α °	Weight g
632 605 00E [1]	**632 705 00E** [1]	5	8	6	7,7	19	9	12	$27^{\pm 1,2}$	8	M5	9	13	16
632 606 00E [2]	**632 706 00E** [1]	6	9	6,75	8,9	21	10	14	$30^{\pm 1,2}$	9	M6	11	13	22
632 608 00E [2]	**632 708 00E** [1]	8	12	9	10,4	25	12,5	17	$36^{\pm 1,2}$	12	M8	14	14	47
632 610 00E [1]	**632 710 00E** [1]	10	14	10,5	12,9	29	15	20	$43^{\pm 1,2}$	15	M10	17	13	77
632 611 00E [3]	**-**	10	14	10,5	12,9	29	15	20	$43^{\pm 1,2}$	15	M10x1,25	17	13	77
632 612 00E [1]	**632 712 00E** [1]	12	16	12	15,4	33	17,5	23	$50^{\pm 1,2}$	18	M12	19	13	100
632 613 00E [3]	**-**	12	16	12	15,4	33	17,5	23	$50^{\pm 1,2}$	18	M12x1,25	19	13	100
632 616 00E [1]	**632 716 00E** [1]	16	21	15	19,3	43	22	29	$64^{\pm 1,2}$	24	M16	22	15	220
632 617 00E [3]	**-**	16	21	15	19,3	43	22	29	$64^{\pm 1,2}$	24	M16x1,5	22	15	220
632 620 00E [2]	**632 720 00E** [1]	20	25	18	24,3	51	27,5	37	$77^{\pm 1,7}$	30	M20x1,5	30	14	420
632 622 00E [1]	**-**	22	28	20	25,8	55	30	40	$84^{\pm 1,7}$	33	M22x1,5	32	15	540
632 625 00E [2]	**632 725 00E** [1]	25	31	22	29,6	61	33,5	44	$94^{\pm 1,7}$	36	M24x2	36	15	720
632 630 00E [1]	**632 730 00E** [1]	30	37	25	34,8	71	40	52	$110^{\pm 2,1}$	45	M30x2	41	17	1100
632 631 00E [3]	**-**	30	37	25	34,8	71	40	52	$110^{\pm 2,1}$	45	M27x2	41	17	1100
632 635 00E [2]	**-**	35	43	28	37,7	81	46	60	$125^{\pm 2,1}$	56	M36x2	50	16	1600

[1] DIN ISO 12240-4 K.
[2] DIN ISO 12240-4 K and DIN ISO 8139 / CETOP.
[3] DIN ISO 8139 / CETOP.

Heavy-Duty Rod Ends GTE Economy-Line, Maintenance Free, External Thread

Material housing: Steel C45 (AISI 1045) forged, zinc-plated.
Material outer ring: Steel with PTFE-lining.
Material inner ring: Steel 105Cr4 (AISI 52100), hardened, ground and polished.
DIN ISO 12240-4 (DIN 648) dimensional series K.
For high, radial and axial alternating loads.
Sliding speeds up to 10 m/min.
Load tables catalogue 43 pages 800 - 801 GT and GT-R.

AR = External Right-hand thread. **AL =** External Left-hand thread.

Ordering Details: e.g.: Product No. 63280500E, Rod End GTE, AR

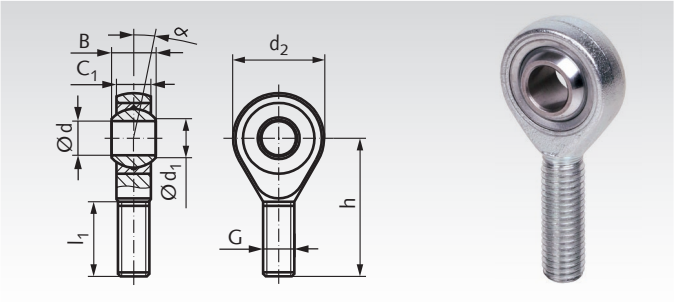

Product No. AR	Product No. AL	d^{H7} mm	$B^{-0,12}$ mm	$C_1^{\pm 0,5}$ mm	d_1 mm	d_2^{max} mm	h mm	l_1^{min} mm	Thread ISO DIN 13 6H G mm	Tilting angle α °	Weight g
632 805 00E	**632 905 00E**	5	8	6	7,7	19	$33^{\pm 1,2}$	19	M5	13	13
632 806 00E	**632 906 00E**	6	9	6,75	8,9	21	$36^{\pm 1,2}$	21	M6	13	20
632 808 00E	**632 908 00E**	8	12	9	10,4	25	$42^{\pm 1,2}$	25	M8	14	38
632 810 00E	**632 910 00E**	10	14	10,5	12,9	29	$48^{\pm 1,2}$	28	M10	13	55
632 812 00E	**632 912 00E**	12	16	12	15,4	33	$54^{\pm 1,2}$	32	M12	13	85
632 816 00E	**632 916 00E**	16	21	15	19,3	43	$66^{\pm 1,2}$	37	M16	15	210
632 820 00E	**632 920 00E**	20	25	18	24,3	51	$78^{\pm 1,7}$	45	M20x1,5	14	380
632 825 00E	**632 925 00E**	25	31	22	29,6	61	$94^{\pm 1,7}$	55	M24x2	15	640
632 830 00E	**632 930 00E**	30	37	25	34,8	71	$110^{\pm 2,1}$	66	M30x2	17	1100

Heavy-Duty Rod Ends GT-RE Economy-Line, Maintenance Free, Stainless Steel, Internal Thread

Material housing: Steel 1.4301 (AISI 304), forged.
Material outer ring: Steel 1.4301 (AISI 304) with PTFE-lining.
Material inner ring: Steel 1.4122 (AISI 440 C), hardened, ground, bearing surface polished.
DIN ISO 12240-4 (DIN 648) dimensional series K and/or DIN ISO 8139 / CETOP RP 103 P, see footnote.

Load tables catalogue 43 pages 800 - 801 GT and GT-R.

IR = Internal Right-hand thread. **IL =** Internal Left-hand thread.

Ordering Details: e.g.: Product No. 63299605E, Rod End GT-RE, IR, Stainless

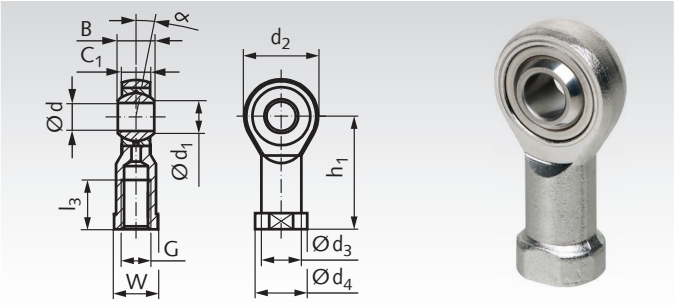

Product No. IR	Product No. IL	d^{H7} mm	$B^{-0.12}$ mm	$C_1^{\pm 0.5}$ mm	d_1 mm	d_2^{max} mm	$d_3 \approx$ mm	d_4^{max} mm	h_1 mm	l_3^{min} mm	Thread ISO DIN 13 6H G mm	W mm	Tilting angle α °	Weight g
632 996 05E 1)	632 997 05E 1)	5	8	6	7,7	19	9	12	$27^{\pm 1,2}$	8	M5	9	13	16
632 996 06E 2)	632 997 06E 1)	6	9	6,75	8,9	21	10	14	$30^{\pm 1,2}$	9	M6	11	13	22
632 996 08E 2)	632 997 08E 1)	8	12	9	10,4	25	12,5	17	$36^{\pm 1,2}$	12	M8	14	14	47
632 996 10E 1)	632 997 10E 1)	10	14	10,5	12,9	29	15	20	$43^{\pm 1,2}$	15	M10	17	13	77
632 996 11E 3)	-	10	14	10,5	12,9	29	15	20	$43^{\pm 1,2}$	15	M10x1,25	17	13	77
632 996 12E 1)	632 997 12E 1)	12	16	12	15,4	33	17,5	23	$50^{\pm 1,2}$	18	M12	19	13	100
632 996 13E 3)	-	12	16	12	15,4	33	17,5	23	$50^{\pm 1,2}$	18	M12x1,25	19	13	100
632 996 16E 1)	632 997 16E 1)	16	21	15	19,3	43	22	29	$64^{\pm 1,2}$	24	M16	22	15	220
632 996 17E 3)	-	16	21	15	19,3	43	22	29	$64^{\pm 1,2}$	24	M16x1,5	22	15	220
632 996 20E 2)	632 997 20E 1)	20	25	18	24,3	51	27,5	37	$77^{\pm 1,7}$	30	M20x1,5	30	14	420
632 996 25E 2)	-	25	31	22	29,6	61	33,5	44	$94^{\pm 1,7}$	36	M24x2	36	15	720
632 996 30E 1)	632 997 30E 1)	30	37	25	34,8	71	40	52	$110^{\pm 2,1}$	45	M30x2	41	17	1100
632 996 31E 3)	-	30	37	25	34,8	71	40	52	$110^{\pm 2,1}$	45	M27x2	41	17	1100
632 996 35E 2)	-	35	43	28	37,7	81	46	60	$125^{\pm 2,1}$	56	M36x2	50	16	1600

1) DIN ISO 12240-4 K.
2) DIN ISO 12240-4 K and DIN ISO 8139 / CETOP.
3) DIN ISO 8139 / CETOP.

Heavy-Duty Rod Ends GT-RE Economy-Line, Maintenance Free, Stainless Steel, External Thread

Material housing: Steel 1.4301 (AISI 304), forged.
Material outer ring: Steel 1.4301 (AISI 304) with PTFE-lining.
Material inner ring: Steel 1.4122 (AISI 440 C), hardened, ground, bearing surface polished.
DIN ISO 12240-4 (DIN 648) dimensional series K.

Load tables catalogue 43 pages 800 - 801 GT and GT-R.

AR = External Right-hand thread. **AL =** External Left-hand thread.

Ordering Details: e.g.: Product No. 63299805E, Rod End GT-RE, AR, Stainless

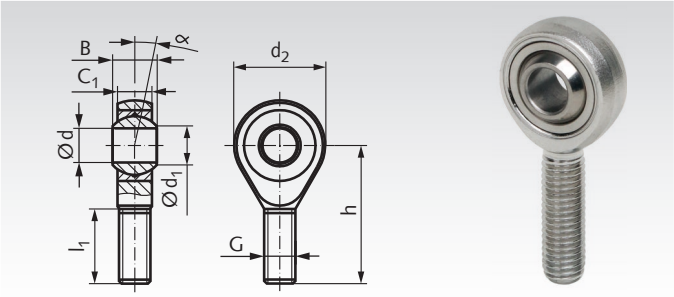

Product No. AR	Product No. AL	d^{H7} mm	$B^{-0,12}$ mm	$C_1^{\pm 0,5}$ mm	d_1 mm	d_2^{max} mm	h mm	l_1^{min} mm	Thread ISO DIN 13 6H G mm	Tilting angle α °	Weight g
632 998 05E	632 999 05E	5	8	6	7,7	19	$33^{\pm 1,2}$	19	M5	13	13
632 998 06E	632 999 06E	6	9	6,75	8,9	21	$36^{\pm 1,2}$	21	M6	13	20
632 998 08E	632 999 08E	8	12	9	10,4	25	$42^{\pm 1,2}$	25	M8	14	38
632 998 10E	632 999 10E	10	14	10,5	12,9	29	$48^{\pm 1,2}$	28	M10	13	55
632 998 12E	632 999 12E	12	16	12	15,4	33	$54^{\pm 1,2}$	32	M12	13	85
632 998 16E	632 999 16E	16	21	15	19,3	43	$66^{\pm 1,2}$	37	M16	15	210
632 998 20E	632 999 20E	20	25	18	24,3	51	$78^{\pm 1,7}$	45	M20x1,5	14	380
632 998 25E	-	25	31	22	29,6	61	$94^{\pm 1,7}$	55	M24x2	15	640
632 998 30E	-	30	37	25	34,8	71	$110^{\pm 2,1}$	66	M30x2	17	1100

Threaded bars with metric thread and fine thread at maedler.de.
Loctite thread locking and bonding products at maedler.de.

Timing Bars, for Timing Belts Profile T, Steel

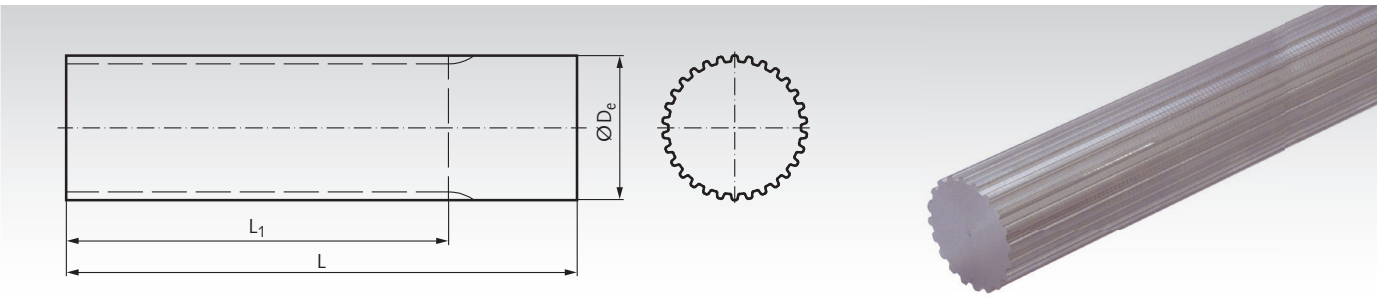

Material: Steel C45.

Ordering Details: e.g.: Product No. 16291001, Timing Bar T5, No. of Teeth 10, Steel

Other types and materials on request.

Profile T 5, Steel

Product No.	Number of teeth	D_e mm	L_1 mm	L mm	Weight kg
162 910 01	10	15,08	140	140	0,18
162 912 01	12	18,26	140	140	0,26
162 914 01	14	21,44	140	140	0,36
162 915 01	15	23,03	140	140	0,41
162 918 01	18	27,81	140	140	0,61
162 920 01	20	30,99	160	160	0,9
162 924 01	24	37,36	160	160	1,25
162 925 01	25	38,95	160	160	1,36
162 930 01	30	46,91	160	160	2,03
162 932 01	32	50,09	160	160	2,32
162 935 01	35	54,86	160	160	2,94
162 936 01	36	56,46	160	160	2,95
162 940 01	40	62,82	160	160	3,86
162 948 01	48	75,55	160	160	5,36
162 960 01	60	94,65	160	160	8,55

Profile T 10, Steel

Product No.	Number of teeth	D_e mm	L_1 mm	L mm	Weight kg
164 910 01	10	29,97	140	140	0,66
164 914 01	14	42,70	160	160	1,65
164 915 01	15	45,89	160	160	1,85
164 918 01	18	55,44	160	160	2,78
164 920 01	20	61,80	160	160	3,48
164 924 01	24	74,53	160	160	5,01
164 925 01	25	77,72	160	160	5,36
164 930 01	30	93,63	160	160	7,99
164 932 01	32	100,00	160	160	9,21
164 936 01	36	112,73	160	160	11,76
164 940 01	40	125,46	160	160	14,86

Timing Bars, for Timing Belts Profile AT, Steel

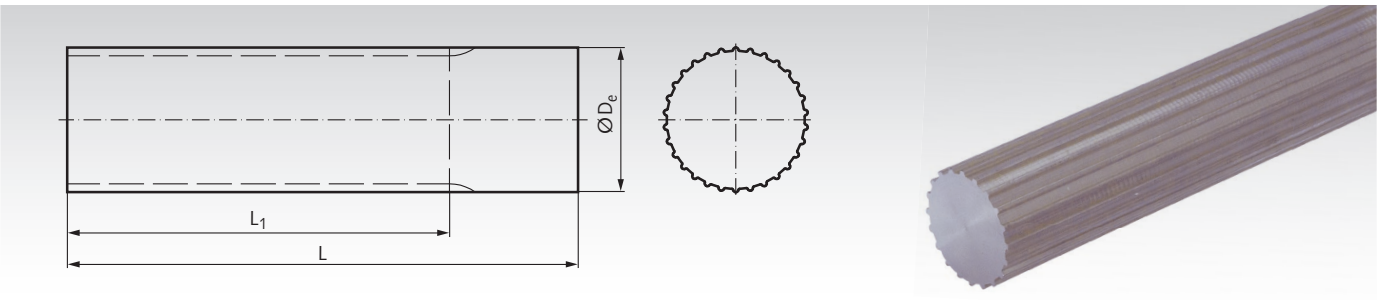

Material: Steel C45.

Ordering Details: e.g.: Product No. 16691201, Timing Bar AT5, No. of Teeth 12, Steel

Other types and materials on request.

Profile AT 5, Steel

Product No.	Number of teeth	D_e mm	L_1 mm	L mm	Weight kg
166 912 01	12	17,88	140	140	0,24
166 915 01	15	22,65	140	140	0,41
166 917 01	17	25,84	140	140	0,54
166 920 01	20	30,61	160	160	0,87
166 925 01	25	38,57	160	160	1,36
166 930 01	30	46,53	160	160	2,00
166 932 01	32	49,71	160	160	2,35
166 936 01	36	56,08	160	160	2,61
166 940 01	40	62,44	160	160	3,71
166 948 01	48	75,17	160	160	5,55
166 960 01	60	94,27	160	160	8,82

Profile AT 10, Steel

Product No.	Number of teeth	D_e mm	L_1 mm	L mm	Weight kg
168 915 01	15	45,93	160	160	1,86
168 920 01	20	61,84	160	160	3,39
168 925 01	25	77,76	160	160	5,53
168 930 01	30	93,67	160	160	8,08
168 932 01	32	100,04	160	160	9,27
168 936 01	36	112,77	160	160	11,85
168 940 01	40	125,50	160	160	14,95

PU Lubricating Gears, Straight Toothed, Axial Lube Port

Material: Gear: Open-cell PU foam, pre-oiled with adhesive oil (H1 approval). Axle: Stainless steel. Plain Bearing.

Module toothing according to DIN 867. Not for torque transmission. The lubrication gear can lubricate a gear or a gear rack. Preferably, the gear should be lubricated. The foam stores the lubricant and releases it in very small doses. The lubricant supply can be done automatically or manually, e.g. with a grease gun.

Temperature range: -10°C to +80°C.

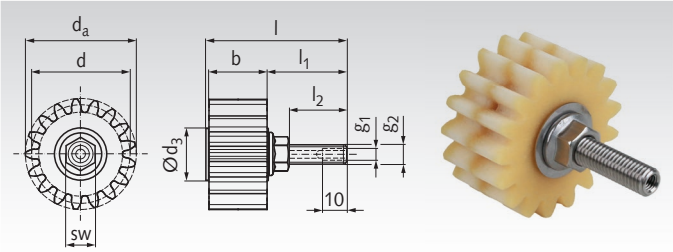

Ordering Details: e.g: Product No. 68057115A, PU lubrication gear, straight toothed, module 1.5, axial lube port

Product No.	Module	Number of teeth	b mm	d_a mm	d mm	l mm	l_1 mm	l_2 mm	g_1 mm	g_2 mm	d_3 mm	sw mm	Weight g
680 571 15A	1,5	24	15	39	36	60,4	44,7	34,0	M6	M10	27	15	57
680 571 20A	2	17	20	38	34	63,9	43,2	32,5	M6	M10	27	15	63
680 571 30A	3	17	30	57	51	71,2	40,5	29,8	M6	M10	27	15	83
680 571 40A	4	17	40	76	68	81,2	40,5	29,8	M6	M10	27	15	124
680 571 50A	5	17	50	95	85	116,4	65,7	49,5	M10x1	M16	60	24	369
680 571 60A	6	17	60	114	102	126,4	65,7	49,5	M10x1	M16	60	24	448
680 571 80A	8	17	80	152	136	146,4	65,7	49,5	M10x1	M16	100	24	622
680 571 00A	10	17	100	190	170	166,6	65,7	49,5	M10x1	M16	100	24	709

PU Lubricating Gears, Straight Toothed, Radial Lube Port

Material: Gear: Open-cell PU foam, pre-oiled with adhesive oil (H1 approval). Axle: Stainless steel. Plain Bearing.

Module toothing according to DIN 867. Not for torque transmission. The lubrication gear can lubricate a gear or a gear rack. Preferably, the gear should be lubricated. The foam stores the lubricant and releases it in very small doses. The lubricant supply can be done automatically or manually, e.g. with a grease gun.

Temperature range: -10°C to +80°C.

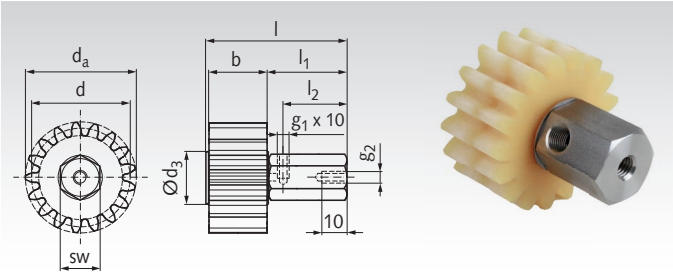

Ordering Details: e.g: Product No. 68057115R, PU lubrication gear, straight toothed, module 1.5, radial lube port

Product No.	Module	Number of teeth	b mm	d_a mm	d mm	l mm	l_1 mm	l_2 mm	g_1 mm	g_2 mm	d_3 mm	sw mm	Weight g
680 571 15R	1,5	24	15	39	36	46,4	30,7	22	M10x1	M8	27	24	129
680 571 20R	2	17	20	38	34	51,4	30,7	22	M10x1	M8	27	24	135
680 571 30R	3	17	30	57	51	61,4	30,7	22	M10x1	M8	27	24	155
680 571 40R	4	17	40	76	68	71,4	30,7	22	M10x1	M8	27	24	196
680 571 50R	5	17	50	95	85	81,4	30,7	22	M10x1	M8	60	24	346
680 571 60R	6	17	60	114	102	91,4	30,7	22	M10x1	M8	60	24	425
680 571 80R	8	17	80	152	136	111,4	30,7	22	M10x1	M8	100	24	694
680 571 00R	10	17	100	190	170	131,4	30,7	22	M10x1	M8	100	24	781

Note: The spinning off of of the lubricant is influenced by factors such as temperature, lubricant viscosity and pre-lubrication. There is a risk of „spraying“ at high speeds.

Further Products on Request

PU foam for food technology, high-temperature resistant environments or special toothing possible. Mounting brackets, mounting plates and other accessories are available on request.

Accessories in our Webshop

Further accessories under www.maedler.de

PU Lubricating Gears, Helical Toothed, Axial Lube Port

Material: Gear: Open-cell PU foam, pre-oiled with adhesive oil (H1 approval). Axle: Stainless steel. Plain Bearing.

STAINLESS

Helical module toothing 19° 31‘ 42“ according to DIN 867. Not for torque transmission. The lubrication gear can lubricate a gear or a gear rack. Preferably, the gear should be lubricated. The foam stores the lubricant and releases it in very small doses. The lubricant supply can be done automatically or manually, e.g. with a grease gun. Please regard the note for helical tooth system.

Temperature range: -10°C to +80°C.

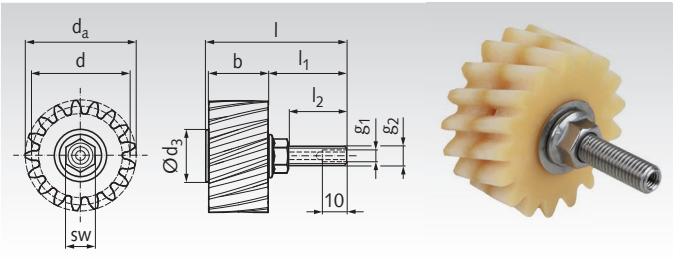

The illustrations show a left-hand lubricating gear.

Ordering Details: e.g: Product No. 68057315A, PU lubrication gear helical right-handed, module 1.5, axial lube port

Product No. right-handed	Product No. left-handed	Module	Number of teeth	b mm	d_a mm	d mm	l mm	l_1 mm	l_2 mm	g_1 mm	g_2 mm	d_3 mm	sw mm	Weight g
680 573 15A	**680 574 15A**	1,5	24	15	41,2	38,20	60,4	44,7	34,0	M6	M10	27	15	58
680 573 20A	**680 574 20A**	2	17	20	40,1	36,08	63,9	43,2	32,5	M6	M10	27	15	65
680 573 30A	**680 574 30A**	3	17	30	60,1	54,11	71,2	40,5	29,8	M6	M10	27	15	90
680 573 40A	**680 574 40A**	4	17	40	80,2	72,15	81,2	40,5	29,8	M6	M10	27	15	130
680 573 50A	**680 574 50A**	5	17	50	100,2	90,19	116,4	65,7	49,5	M10x1	M16	60	24	377
680 573 60A	**680 574 60A**	6	17	60	120,2	108,23	126,4	65,7	49,5	M10x1	M16	60	24	463
680 573 80A	**680 574 80A**	8	17	80	160,3	144,30	146,4	65,7	49,5	M10x1	M16	100	24	624
680 573 00A	**680 574 00A**	10	17	100	200,4	180,38	166,4	65,7	49,5	M10x1	M16	100	24	711

PU Lubricating Gears, Helical Toothed, Radial Lube Port

Material: Gear: Open-cell PU foam, pre-oiled with adhesive oil (H1 approval). Axle: Stainless steel. Plain Bearing.

STAINLESS

Helical module toothing 19° 31‘ 42“ according to DIN 867. Not for torque transmission. The lubrication gear can lubricate a gear or a gear rack. Preferably, the gear should be lubricated. The foam stores the lubricant and releases it in very small doses. The lubricant supply can be done automatically or manually, e.g. with a grease gun. Please regard the note for helical tooth system.

Temperature range: -10°C to +80°C.

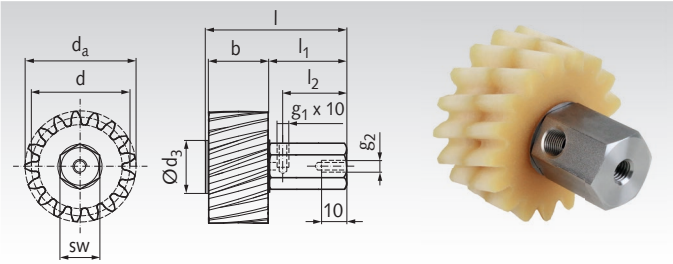

The illustrations show a left-hand lubricating gear.

Ordering Details: e.g: Product No. 68057315R, PU lubrication gear helical toothed right-handed, module 1.5, radial lube port

Product No. right-handed	Product No. left-handed	Module	Number of teeth	b mm	d_a mm	d mm	l mm	l_1 mm	l_2 mm	g_1 mm	g_2 mm	d_3 mm	sw mm	Weight g
680 573 15R	**680 574 15R**	1,5	24	15	41,2	38,20	46,4	30,7	22	M10x1	M8	27	24	130
680 573 20R	**680 574 20R**	2	17	20	40,1	36,08	51,4	30,7	22	M10x1	M8	27	24	139
680 573 30R	**680 574 30R**	3	17	30	60,1	54,11	61,4	30,7	22	M10x1	M8	27	24	159
680 573 40R	**680 574 40R**	4	17	40	80,2	72,15	71,4	30,7	22	M10x1	M8	27	24	198
680 573 50R	**680 574 50R**	5	17	50	100,2	90,19	81,4	30,7	22	M10x1	M8	60	24	350
680 573 60R	**680 574 60R**	6	17	60	120,2	108,23	91,4	30,7	22	M10x1	M8	60	24	430
680 573 80R	**680 574 80R**	8	17	80	160,3	144,30	111,4	30,7	22	M10x1	M8	100	24	696
680 573 00R	**680 574 00R**	10	17	100	200,4	180,38	131,4	30,7	22	M10x1	M8	100	24	783

Note: The spinning off of of the lubricant is influenced by factors such as temperature, lubricant viscosity and pre-lubrication. There is a risk of „spraying“ at high speeds.

Note for Helical Tooth System

In the helical tooth system, only right-handle / left-handle pairing is possible. A right-handed gear can only run with a left-handed gear or a left-handed rack (or inverse).

Further Products on Request

PU foam for food technology, high-temperature resistant environments or special toothing possible. Mounting brackets, mounting plates and other accessories are available on request.

Accessories in our Webshop

PU Chain Lubrication Pinions for Single-Strand Roller Chains, Axial Lube Port

Material: Body: Open-cell PU foam.
Axle: Stainless steel. Plain bearing. Chain sprocket: PA.

STAINLESS

For simplex roller chains DIN ISO 606 (ex DIN 8187).
The rollers made of open-cell PU foam transfer the lubricant to the roller chain link plates at specific points. The lubrication roller is driven by a plastic pinion. It can be installed in any position.
The lubricant supply can be done automatically or manually, e.g. with a grease gun.

Temperature range: -10°C to +80°C.

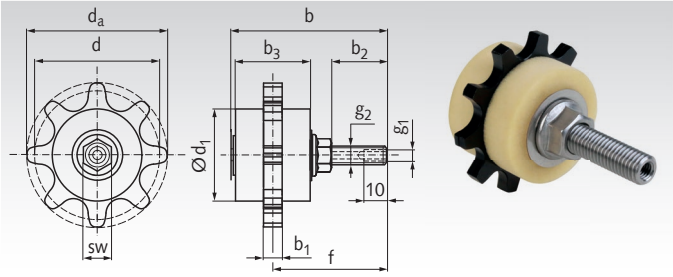

Ordering Details: e.g: Product No. 68057508, PU chain lubrication sprocket 08 B-1, axial lube port

Product No.	DIN ISO	Number of teeth	d mm	d_1 mm	d_a mm	b mm	b_1 mm	b_2 mm	b_3 mm	f mm	g_1 mm	g_2 mm	sw mm	Weight g
680 575 08	08 B-1	12	49,07	39	53	71,2	5	30	29	55,5	M6	M10	15	80
680 575 10	10 B-1	10	51,37	39	55	71,2	5	30	29	55,5	M6	M10	15	80
680 575 12	12 B-1	8	49,78	36	55	71,2	5	30	29	55,5	M6	M10	15	80
680 575 16	16 B-1	8	66,37	48	75	81,2	10	30	40	60,5	M6	M10	15	90
680 575 20	20 B-1	8	82,97	59	90	116,4	10	49,1	50	90,7	M10x1	M16	24	350
680 575 24	24 B-1	10	123,29	93	138	126,4	20	49,1	60	95,7	M10x1	M16	24	800

PU Chain Lubrication Pinions for Double-Strand Roller Chains, Axial Lube Port

Material: Body: Open-cell PU foam.
Axle: Stainless steel. Plain bearing. Chain sprocket: PA.

STAINLESS

For duplex roller chains DIN ISO 606 (ex DIN 8187).
The rollers made of open-cell PU foam transfer the lubricant to the roller chain link plates at specific points. The lubrication roller is driven by a plastic pinion. It can be installed in any position.
The lubricant supply can be done automatically or manually, e.g. with a grease gun.

Temperature range: -10°C to +80°C.

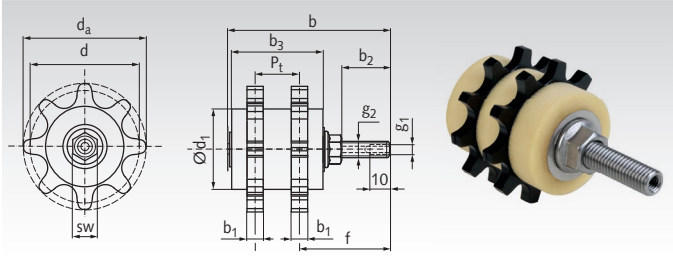

Ordering Details: e.g: Product No. 68057608, PU chain lubrication sprocket 08 B-2, axial lube port

Product No.	DIN ISO	Number of teeth	d mm	d_1 mm	d_a mm	b mm	b_1 mm	b_2 mm	b_3 mm	P_t mm	f mm	g_1 mm	g_2 mm	sw mm	Weight g
680 576 08	08 B-2	12	49,07	39	53	81,2	5	30	40	15	53	M6	M10	15	115
680 576 10	10 B-2	10	51,37	39	55	81,2	5	30	40	15	53	M6	M10	15	115
680 576 12	12 B-2	8	49,78	36	55	86,2	5	30	44	15	55,5	M6	M10	15	115
680 576 16	16 B-2	8	66,37	48	75	146,4	10	49,1	80	30	90,7	M10x1	M16	24	130
680 576 20	20 B-2	8	82,97	59	90	146,4	10	49,1	80	30	90,7	M10x1	M16	24	417
680 576 24	24 B-2	10	123,29	93	138	166,4	10	49,1	100	50	95,7	M10x1	M16	24	923

PU Chain Lubrication Pinions for Double-Strand Roller Chains, Radial Lube Port

Material: Body: Open-cell PU foam.
Axle: Stainless steel. Plain bearing. Chain sprocket: PA.

STAINLESS

For duplex roller chains DIN ISO 606 (ex DIN 8187).
The rollers made of open-cell PU foam transfer the lubricant to the roller chain link plates at specific points. The lubrication roller is driven by a plastic pinion. It can be installed in any position.
The lubricant supply can be done automatically or manually, e.g. with a grease gun.

Temperature range: -10°C to +80°C.

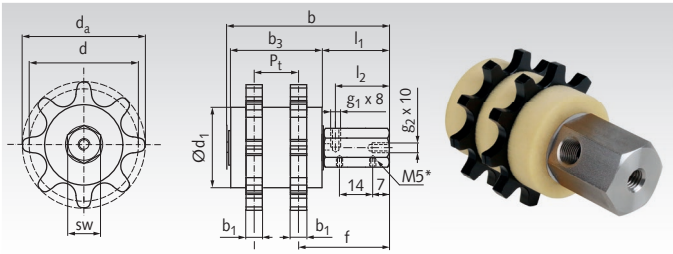

*Fastening thread for spring plate mounting.

On request: Can also be supplied with a spring plate on one or both sides for easy installation.

Ordering Details: e.g: Product No. 68057608R, PU chain lubrication sprocket 08 B-2, radial lube port

Product No.	DIN ISO	Number of teeth	d mm	d_1 mm	d_a mm	b mm	b_1 mm	P_t mm	l_1 mm	l_2 mm	b_3 mm	f mm	g_1 mm	g_2 mm	sw mm	Weight g
680 576 08R	08 B-2	12	49,07	39	53	71,4	5	15	30	22	40	43,2	M10x1	M8	24	187
680 576 10R	10 B-2	10	51,37	39	55	71,4	5	15	30	22	40	43,2	M10x1	M8	24	187
680 576 12R	12 B-2	8	49,78	36	55	76,4	5	15	30	22	44	45,7	M10x1	M8	24	187
680 576 16R	16 B-2	8	66,37	48	75	111,4	10	30	30	22	80	55,7	M10x1	M8	24	202
680 576 20R	20 B-2	8	82,97	59	90	111,4	10	30	30	22	80	55,7	M10x1	M8	24	501
680 576 24R	24 B-2	10	123,29	93	138	131,4	10	50	30	22	100	50,7	M10x1	M8	24	1010

Note: The spinning off of the lubricant is influenced by factors such as temperature, lubricant viscosity and pre-lubrication.
There is a risk of „spraying“ at high speeds.

Single Point Lubrication System perma STAR VARIO

Material: Housing: Plastic.

Fully automatic, independent of temperature and pressure. Extremely precise dispensing behaviour. The system consists of an electromechanical drive unit, a cartridge with 60, 120 or 250 cm³ of lubricant, a support and a battery set.
The pressure build-up of 7.5 bar enables remote mounting at a distance up to 5 metres. LCD display with setting button shows dispensing time, cartridge size and operating status. LED signals for function and any faults.

Application range: For single-point lubrication of roller and plain bearings, sliding guides, open gears, gear racks, spindles, shaft seals and chains.

SFO1: Modern designed multi-purpose grease. Water-resistant, oxidation-stable. Good wear and corrosion protection.
Based on lithium / calcium.

SO32: High-performance gear and multi-purpose oil based on based on mineral oil. Good wear and corrosion protection.

Temperature range: -20°C to +60°C.

Please note: Drive unit, cartridge, support and battery set must be ordered separately.
On request we also supply cartridge LC500 with 500cm³.
Operating instructions at **www.maedler.de**

Ordering Details: e.g: Product No. 68060001, Drive Unit

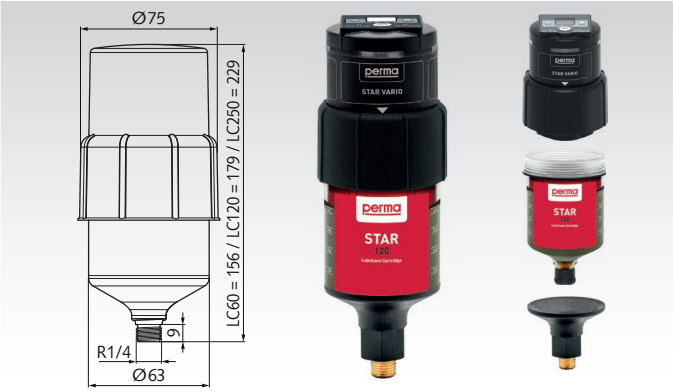

Functionality	Electromechanical
Lubricant volume	60 cm³, 120 cm³, 250 cm³
Operating pressure	7.5 bar
Lubricants	Greases up to NLGI 2 / oils
Outlet Thread	R1/4"
Running time	1 to 24 months adjustable
Protection class	Grease-LC: IP 67 / Oil-LC: IP 65
max. hose line	3 m (grease) / 5 m (oil)

*The maximum length of the hose line depends on the lubrication system, lubricant and operating temperature.

Basic Article perma STAR VARIO

Product No.	Description	Weight kg
680 600 01	Drive unit	0,36
680 600 02	Battery set	0,08
680 600 03	Support	0,04
680 547 00	Oil retaining valve*	0,03

*Not required for grease lubrication.

Cartridges (LC-Units) for perma STAR VARIO

Product No.	Description	Weight kg
680 600 05	Grease cartridge SF01 LC60 - 60cm³	0,13
680 600 06	Grease cartridge SF01 LC120 - 120cm³	0,20
680 600 07	Grease cartridge SF01 LC250 - 250cm³	0,36
680 600 08	Oil cartridge SO32 LC60 - 60cm³	0,13
680 600 09	Oil cartridge SO32 LC120 - 120cm³	0,20
680 600 10	Oil cartridge SO32 LC250 - 250cm³	0,36

Mounting Clamp 30mm and Bracket STAR G1/4i

Ordering Details: e.g: Product No. 68060011

Product No.	Description	Weight kg
680 600 11	Clamp	0,21
680 600 12	Bracket	0,22

Material: Stainless steel.

Mounting clamp dimensions:
Clamp width: 30 mm, sheet thickness: 6 mm.Height: 40 mm.
Bracket dimensions:
Length: 106.6 mm, width: 88 mm.
Height: 43 mm.

Polyamide Hose, Outer-Ø 8mm, Inner-Ø 6mm

Ordering Details: e.g: Product No. 86980801 Polyamide hose Ø 8/6 mm, natural, length (max. length 100 m)

Product No.	Colour	Weight g/m
869 808 01	Natural	30
869 808 03	Black	30

Material: Polyamide.

- Open-length.
- Diameter: 8/6 mm
- Bending radius min. 50mm.
- Operating pressure at 20°C: max. 19 bar.
- Operating pressure at 60°C: max. 10.8 bar.

Temperature range: -35°C to +60°C.

Flush Connection with Ball Valve R1/4a x G1/4i

Ordering Details: e.g: Product No. 68060013, Flush connection with ball valve, brass

Product No.	Type	Length mm	Weight g
680 600 13	Brass	98	228
680 600 14	Stainless steel	98	207

Material: Nickel-plated brass.
Stainless steel.

For manual initial and re-lubrication to protect perma lubrication systems from damage.

Hose Prefill Adapter Set for Hose-Ø 6mm and 8mm

Ordering Details: Product No. 68060015, Hose prefill adapter set

Product No.	Length mm	Weight g
680 600 15	max. 85	208

Filling set with conical and flat grease nipples. Hoses must be pre-filled so that the lubricant reaches the lubrication point immediately.

Hose Connectors for Ø 8mm

Ordering Details: e.g: Product No. 68057901, hose connector Ø 8mm, G1/8a

Product No.	Type		Weight g
680 579 01	G1/8a	- straight	15
680 579 02	G1/8a 90°	- angled	22
680 579 03	G1/4a	- straight	14
680 579 04	G1/4i	- straight	23
680 579 05	G1/4a 90°	- angled	25
680 579 06	G3/8a	- straight	19
680 579 07	M6a	- straight	13
680 579 08	M6a 90°	- angled	21
680 579 09	M8x1a	- straight	15
680 579 10	M8x1a 90°	- angled	23
680 579 11	M10x1a	- straight	15
680 579 12	M10x1a 90°	- angled	24

Material: Brass, nickel-plated.

Suitable for hose Ø 8 mm, up to 25 bar. Connection piece for simple connection of hose and lube port.
a = external thread i = internal thread

Reducers / Reducer Couplings

Ordering Details: e.g: Product No. 68057930, Reducer G1/4a x G1/8i

Product No.	Type	Weight g
680 579 30	G1/4a x G1/8i	11
680 579 31	G1/8a x G1/4i	20
680 579 32	R1/2a x G1/4i	36
680 579 33	R1/4a x G1/4i	20
680 579 34	R1/8a x G1/4i	22
680 579 35	R3/4a x G1/4i	65
680 579 36	R3/8a x G1/4i	13
680 579 37	M6a x G1/4i	17
680 579 38	M8a x G1/4i	17
680 579 39	M8x1a x G1/4i	16
680 579 40	M10a x G1/4i	19
680 579 41	M10x1a x G1/4i	19

Material: Brass.

An additional sealing tape should be used to seal the threads (commercially available PTFE tape or similar).
a = external thread i = internal thread

Support for Tensioning Elements or Idlers, Zinc-Plated

Material: Steel, zinc-plated.

This support enables an easy mounting of the tensioning element or an idler wheel to the machine. The hole A is for fastening the tensioner with it´s central screw. The mounting can be done at the front side or back side of the support. For any other purposes, the both holes B can be used to fix other parts instead of a tensioner.

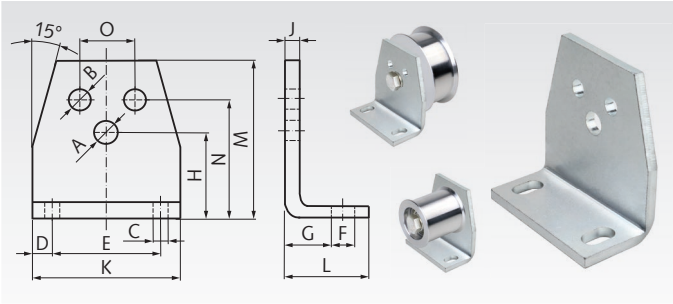

Ordering Details: e.g.: 14080011, Support for Tensioning Elements Size 0, zinc-plated

Product No.	for Size	A mm	B mm	C mm	D mm	E mm	F mm	G mm	H mm	J mm	K mm	L mm	M mm	N mm	O mm	Weight kg
140 800 11	0	6,5	5,5	7	7,5	30	13	11,5	27	4	45	30	46	35	10	0,08
140 801 11	1	8,5	6,5	7	7,5	40	13	13,5	34	5	55	32	58	44	12	0,15
140 802 11	2	10,5	8,5	9,5	10	50	15,5	16,5	43	6	70	38	74	55	20	0,30
140 803 11	3	12,5	10,5	11,5	12,5	65	21,5	21	57	8	90	52	98	75	25	0,66
140 804 11	4	16,5	12,5	14	15	80	24	21	66	8	110	55	116	85	35	0,94
140 804 12	4	20,5	12,5	14	15	80	24	21	66	8	110	55	116	85	35	0,94

BALLISTOL® 25313 H1 Special Oil, Spray

Ordering details: e.g.: Product No. 14070171, BALLISTOL H1 Special Oil, Spray

Product No.	Contents in ml	Weight in g
140 701 71	400	430

BALLISTOL H1 Special Oil Spray lubricates parts and machines that may occasionally come into technical contact with food.

- Colourless, odourless and flavourless.
- Extremely good at creeping.
- Silicone, PTFE, acid and resin free.
- Free from animal oils.
- Food oil with international NSF H1 approval (No. 143097).
- Temperature range: -5°C to +220°C.
- Danger (5) H222, H229.

BALLISTOL® 22800 Precision Mechanic Oil, Spray

Ordering details: e.g.: Product No. 14070172, BALLISTOL Precision mechanic oil, Spray

Product No.	Contents in ml	Weight in g
140 701 72	200	230

BALLISTOL Precision Mechanic Oil Spray for the care, lubrication and preservation of precision mechanical equipment, machines, production facilities, tools and all metal parts.

- Silicone-, PTFE-, acid- and resin-free.
- Extremely creepable.
- Resistant to ageing.
- Infiltrates and displaces water.
- Suitable as contact oil and rust remover.
- Temperature range: -50°C to +150°C.
- Danger (1, 5) H222, H229, H315, H412.

BALLISTOL® 21160 Universal Oil, liquid, 5 liters

Ordering details: e.g.: Product No. 14070173, BALLISTOL Universal Oil, liquid

Product No.	Contents in ml	Weight in g
140 701 73	5000	5260

BALLISTOL Universal Oil cleans, maintains, protects, preserves, dissolves unwanted residues and provides rust protection without gumming up.

- Extremely creepable.
- Sliding active.
- Completely biodegradable.
- Food safe.
- Skin-compatible.
- Completely harmless according to §§ 30,31 LFGB and EG Regulation No. 1935/2004.

BALLISTOL® 25363 Wood Glide, Spray

Ordering details: e.g.: Product No. 14070174, BALLISTOL Wood Glide, Spray

Product No.	Contents in ml	Weight in g
140 701 74	400	430

BALLISTOL wood glide spray prevents dirt from adhering or being attracted. It forms an invisible, dry and residue-free film that allows the wood to slide easily over the machine table.

- Oil, grease, silicone, acid, graphite, resin-free.
- For simple, fast and safe application, even during machine operation.
- Temperature range: -40°C to +250°C.
- Danger (1, 5) H222, H229, H319.

BALLISTOL® 25417 Resin Remover

Ordering details: e.g.: Product No. 14070176, BALLISTOL Resin Remover, Pump sprayer 750ml

Product No.	Contents in ml	Weight in g
140 701 76	750	920

BALLISTOL Resin Remover has been specially developed for woodworking machines and industrial maintenance.

- Easy and complete cleaning of resin-coated tools.
- Very economical.
- Suitable for alkali-resistant surfaces.
- Temperature range: –5°C to +40°C.
- Danger (3) H315, H318.

BALLISTOL® 25425 Resin Remover, 5 litres

Ordering details: e.g.: Product No. 14070177, BALLISTOL Resin Remover, Canister 5000ml

Product No.	Contents in ml	Weight in g
140 701 77	5000	5260

BALLISTOL Resin Remover has been specially developed for woodworking machines and industrial maintenance.

- Easy and complete cleaning of resin-coated tools.
- Very economical.
- Suitable for alkali-resistant surfaces.
- Temperature range: –5°C to +40°C.
- Danger (3) H315, H318.

H222 Extremely flammable aerosol.
H229 Pressurised container: May burst if heated.
H315 Causes skin irritation.
H318 Causes serious eye damage.
H319 Causes serious eye irritation.
H411 Toxic to aquatic life with long lasting effects.
H412 Harmful to aquatic life with long lasting effects.

1 3 5

Safety Data Sheets at www.maedler.de in the section Downloads

MÄDLER® GEGRÜNDET 1882

SKF® Bearing Grease LGWA 2/0.4, for a wide range of Applications

Ordering Details: e.g: Product No. 68055040, LGWA 2/0.4

Product No.	Content	Packaging	Weight in g
680 550 40	420 ml	Cartridge	390

Specifications
- Lithium soap based grease on mineral oil with EP additives.
- DIN 51825 code KP2N-30.
- NLGI consistency class 2.
- Colour orange.
- Very suitable for short-term temperatures up to 220 °C.
- Protection of wheel bearings under the toughest conditions.
- Effective lubrication under wet conditions.
- Good water and corrosion resistance.
- Temperature range: -30°C to +140°C.

SKF LGWA 2 is a high-quality lithium complex soap grease based on mineral oil with EP high-pressure additives. LGWA 2 is suitable for industrial and automotive applications where the loads or temperatures exceed the limits of conventional greases.

Typical Applications
- Wheel bearings in passenger cars, lorries and semi-trailers.
- Washing machines.
- Ventilators and electric motors.

SKF® Bearing Grease LGEP 2/0.4, for a wide range of Applications

Ordering Details: e.g: Product No. 68055041, LGEP 2/0.4

Product No.	Content	Packaging	Weight in g
680 550 41	420 ml	Cartridge	370

Specifications
- Lithium saponified grease based on mineral oil.
- DIN 51825 code KP2G-20.
- NLGI consistency class 2.
- Colour light brown.
- Excellent mechanical stability.
- Extremely good corrosion protection.
- Excellent EP behaviour.
- Temperature range: -20°C to +110°C.
- H412.

SKF LGEP 2 is a mineral oil based lithium soap grease with high pressure additives. It provides a good lubricating function in general applications where difficult environmental conditions and vibrations may occur.

Typical Applications
- Jaw crushers.
- Large machines, vibrating screens.
- Crane wheels, rope pulleys.
- Work roll bearings in the steel industry.
- Sealed spherical roller bearings.

SKF® Bearing Grease LGEV 2/0.4, for high Loads

Ordering Details: e.g: Product No. 68055042, LGEV 2/0.4

Product No.	Content	Packaging	Weight in g
680 550 42	420 ml	Cartridge	400

Specifications
- Lithium-calcium soap grease based on mineral oil.
- DIN 51825 code KPF2K-10
- NLGI consistency class 2.
- Colour black.
- Excellent suitability for large spherical roller bearings.
- High mechanical strength.
- Good water resistance.
- Good corrosion protection.
- Temperature range: -10°C to +120°C.

SKF LGEV 2 is a lithium-calcium soap grease based on mineral oil. The high content of molybdenum disulphide and graphite in combination with an extremely high viscosity oil ensures excellent protection even under the most difficult conditions, such as high loads, low speeds and high vibrations.

Typical Applications
- Journal bearings for rotary drums.
- Support and pressure rollers for rotary kilns.
- Bucket wheel excavators.
- Slewing ring bearings.
- Good-bed roller mills.
- Crushers.
- Converter bearings.

SKF® Bearing Grease LGHB 2/0.4, for high Loads

Ordering Details: e.g: Product No. 68055043, LGHB 2/0.4

Product No.	Content	Packaging	Weight in g
680 550 43	420 ml	Cartridge	400

Specifications
- Calcium sulphonate complex soap grease based on mineral oil.
- DIN 51825 code KP2N-20
- NLGI consistency class 2.
- Colour brown.
- Excellent load-bearing capacity.
- Suitable for peak temperatures of up to 200 °C.
- Excellent corrosion protection against water ingress.
- Temperature range: -20°C to +150°C.
- Attention (1) H319

SKF LGHB 2 is a highly viscous calcium sulphonate complex soap grease based on mineral oil that has been developed for high temperatures and extreme loads and is suitable for a wide range of applications, particularly in the cement, mining and metal industries. The additive-free grease owes its EP properties to its soap structure.

Typical Applications
- Steel-steel spherical plain bearings.
- Systems for the production of pulp and paper.
- Asphalt vibrating screens.
- Continuous casting plants.
- Sealed spherical roller bearings up to 150 °C.
- Work roll bearings for the steel industry.
- Lifting rollers for forklift trucks.

1

H319 Causes serious eye irritation.
H412 Harmful to aquatic life with long lasting effects.

Safety Data Sheets at www.maedler.de in the section Downloads

SKF® Bearing Grease LGHP 2/0.4, for high Temperatures

Ordering Details: e.g: Product No. 68055044, LGHP 2/0.4

Product No.	Content	Packaging	Weight in g
680 550 44	420 ml	Cartridge	435

Specifications
- High-quality grease based on mineral oil.
- DIN 51825 code K2N-40.
- NLGI consistency class 2-3.
- Colour blue.
- Wide Temperature range.
- Excellent corrosion protection.
- High thermal and mechanical resistance.
- Good start-up behaviour at low temperatures.
- Temperature range: -40°C to +150°C.
- Attention (4) H361f

SKF LGHP 2 is a high-quality lubricating grease based on mineral oil. It contains a modern polyurea (diurea) as a thickener. The grease is extremely durable at high temperatures.

Typical Applications
- Small, medium and large electric motors.
- Industrial blowers.
- Water pumps.
- Rolling bearings in textile, paper processing and drying drying plants.
- Clutch release bearings.
- Vertical shafts.
- Kiln cars and wheels.
- Ball and roller bearings for medium to high speeds and high temperatures.

SKF® General purpose food grade Grease LGFG 2/0.4, Food-Safe, Halal, Kosher

Ordering Details: e.g: Product No. 68055045, LGFG 2/0.4

Product No.	Content	Packaging	Weight in g
680 550 45	420 ml	Cartridge	450

Specifications
- Food grease with calcium sulphonate and white mineral oil.
- DIN 51825 code KP2N-30
- NLGI consistency class 2.
- Colour brown.
- Category H1 - NSF reg. no. 164513, Halal, Kosher.
- Excellent water and corrosion resistance.
- Excellent mechanical stability.
- Good lubricity in single point lubrication systems.
- Excellent protection against stress and wear.
- Temperature range: -30°C to +140°C.

SKF LGFG 2 is a high performance food grade grease with a complex calcium sulfonate thickening technology and a white mineral oil. It is suitable for applications with high loads, humid environments and fluctuating temperatures, such as those found in the food and beverage industry.

Typical Applications
- Conveyor storage.
- Packaging machines.
- Filling systems.

SKF® SYSTEM 24 LAGD 125/WA2 with Lubricating Grease, Gas-operated Single-Point Lubricator

Ordering Details: e.g: Product No. 68055046, LAGD 125/WA2

Product No.	Content	Packaging	Weight in g
680 550 46	125 ml	Lubricator	190

Specifications
- Flexible delivery rate from 1 to 12 months. The lubricator can be temporarily de-activated and can get re-adjusted with another delivery rate.
- Maximum length of supply line 0.3 m.
- Maximum pressure 5 bar.
- Connection thread R1/4".
- Approved for ATEX zone 0.
- Transparent container enables inspection of the delivery rate.
- Compact dimensions, suitable for confined spaces.
- Rolling bearing grease LGWA 2 for a wide Temperature range, extreme pressures, high loads.
- Temperature range: -20°C to +60°C.

LAGD 125/WA2 is filled with SKF LGWA 2 grease. The grease is designed for a wide Temperature range and extreme pressures. Activation and time setting are carried out without tools, so that simple, safe and precise relubrication is possible. With gas cell for generating shielding gas.

Typical Applications
- Ventilators and electric motors.
- Bearings for conveyor head and reversing drum.

SKF® SYSTEM 24 LAGD 125/HMT68 with Chain Oil, Gas-operated Single-Point Lubricator

Ordering Details: e.g: Product No. 68055047, LAGD 125/HMT68

Product No.	Content	Packaging	Weight in g
680 550 47	125 ml	Lubricator	190

Specifications
- Flexible delivery rate from 1 to 12 months. The lubricator can be temporarily de-activated and can get re-adjusted with another delivery rate.
- Maximum length of supply line 1.5 m.
- Maximum pressure 5 bar.
- Connection thread R1/4".
- Approved for ATEX zone 0.
- Transparent container enables inspection of the delivery rate.
- Compact dimensions, suitable for confined spaces.
- High-performance chain oil LHMT 68 filled, with strong wear inhibition.
- Temperature range: -20°C to +60°C.

4

LAGD 125/HMT68 is filled with SKF LHMT 68, a high-performance mineral chain oil with high wear protection. Activation and time setting are carried out without tools, so that relubrication is simple, safe and precise relubrication is is possible. An oil non-return valve is included in the scope of delivery.

Typical Applications
- Conveyor, drive and lift chains.
- Ovens.

H361f Suspected of damaging fertility.

Safety Data Sheets at www.maedler.de in the section Downloads

MÄDLER® GEGRÜNDET 1882

Straight Pins, Spring-Type ISO 8752 (formerly DIN 1481), Ø 1-5 mm

Material: Spring steel, black oxide finish, oiled.
Stainless steel 1.4310 (AISI 301).

Heavy-duty hollow dowel pins. As a shaft-to-hub connection or for fixing the position of other components in relation to each other. Reusable. With oversize. The locating bore should correspond to the nominal diameter d_1, with tolerance H12.

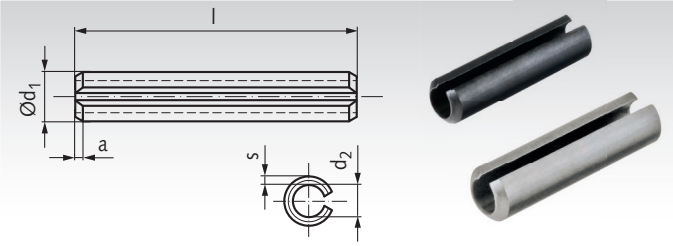

Ordering Details: e.g.: Product No. 618701004, Straight Pin ISO 8752, spring steel, 1 x 4 mm

Product No. Spring steel	Product No. Stainless	d_1* mm	l mm	$d_{1\,max}$ mm	d_2 mm	a mm	s mm	F** kN	Weight g
618 701 004	618 801 004	1	4	1,3	0,8	0,15	0,2	0,7	0,008
618 701 005	618 801 005	1	5	1,3	0,8	0,15	0,2	0,7	0,010
618 701 006	618 801 006	1	6	1,3	0,8	0,15	0,2	0,7	0,012
618 701 008	618 801 008	1	8	1,3	0,8	0,15	0,2	0,7	0,016
618 701 010	618 801 010	1	10	1,3	0,8	0,15	0,2	0,7	0,020
618 701 012	618 801 012	1	12	1,3	0,8	0,15	0,2	0,7	0,024
618 701 505	618 801 505	1,5	5	1,8	1,1	0,25	0,3	1,58	0,040
618 701 506	618 801 506	1,5	6	1,8	1,1	0,25	0,3	1,58	0,048
618 701 508	618 801 508	1,5	8	1,8	1,1	0,25	0,3	1,58	0,064
618 701 510	618 801 510	1,5	10	1,8	1,1	0,25	0,3	1,58	0,080
618 701 512	618 801 512	1,5	12	1,8	1,1	0,25	0,3	1,58	0,096
618 701 514	618 801 514	1,5	14	1,8	1,1	0,25	0,3	1,58	0,112
618 701 516	618 801 516	1,5	16	1,8	1,1	0,25	0,3	1,58	0,128
618 701 518	618 801 518	1,5	18	1,8	1,1	0,25	0,3	1,58	0,144
618 701 520	618 801 520	1,5	20	1,8	1,1	0,25	0,3	1,58	0,160
618 702 005	618 802 005	2	5	2,4	1,5	0,35	0,4	2,82	0,085
618 702 006	618 802 006	2	6	2,4	1,5	0,35	0,4	2,82	0,102
618 702 008	618 802 008	2	8	2,4	1,5	0,35	0,4	2,82	0,136
618 702 010	618 802 010	2	10	2,4	1,5	0,35	0,4	2,82	0,170
618 702 012	618 802 012	2	12	2,4	1,5	0,35	0,4	2,82	0,204
618 702 014	618 802 014	2	14	2,4	1,5	0,35	0,4	2,82	0,238
618 702 016	618 802 016	2	16	2,4	1,5	0,35	0,4	2,82	0,272
618 702 018	618 802 018	2	18	2,4	1,5	0,35	0,4	2,82	0,306
618 702 020	618 802 020	2	20	2,4	1,5	0,35	0,4	2,82	0,340
618 702 022	618 802 022	2	22	2,4	1,5	0,35	0,4	2,82	0,374
618 702 024	618 802 024	2	24	2,4	1,5	0,35	0,4	2,82	0,408
618 702 026	618 802 026	2	26	2,4	1,5	0,35	0,4	2,82	0,442
618 702 028	618 802 028	2	28	2,4	1,5	0,35	0,4	2,82	0,476
618 702 030	618 802 030	2	30	2,4	1,5	0,35	0,4	2,82	0,510
618 702 505	618 802 505	2,5	5	2,9	1,8	0,4	0,5	4,38	0,120
618 702 506	618 802 506	2,5	6	2,9	1,8	0,4	0,5	4,38	0,144
618 702 508	618 802 508	2,5	8	2,9	1,8	0,4	0,5	4,38	0,192
618 702 510	618 802 510	2,5	10	2,9	1,8	0,4	0,5	4,38	0,240
618 702 512	618 802 512	2,5	12	2,9	1,8	0,4	0,5	4,38	0,288
618 702 514	618 802 514	2,5	14	2,9	1,8	0,4	0,5	4,38	0,336
618 702 516	618 802 516	2,5	16	2,9	1,8	0,4	0,5	4,38	0,384
618 702 518	618 802 518	2,5	18	2,9	1,8	0,4	0,5	4,38	0,432
618 702 520	618 802 520	2,5	20	2,9	1,8	0,4	0,5	4,38	0,480
618 702 522	618 802 522	2,5	22	2,9	1,8	0,4	0,5	4,38	0,528
618 702 524	618 802 524	2,5	24	2,9	1,8	0,4	0,5	4,38	0,576
618 702 526	618 802 526	2,5	26	2,9	1,8	0,4	0,5	4,38	0,624
618 702 528	618 802 528	2,5	28	2,9	1,8	0,4	0,5	4,38	0,672
618 702 530	618 802 530	2,5	30	2,9	1,8	0,4	0,5	4,38	0,720
618 703 005	618 803 005	3	5	3,5	2,1	0,5	0,6	6,32	0,200
618 703 006	618 803 006	3	6	3,5	2,1	0,5	0,6	6,32	0,240
618 703 008	618 803 008	3	8	3,5	2,1	0,5	0,6	6,32	0,320
618 703 010	618 803 010	3	10	3,5	2,1	0,5	0,6	6,32	0,400
618 703 012	618 803 012	3	12	3,5	2,1	0,5	0,6	6,32	0,480
618 703 014	618 803 014	3	14	3,5	2,1	0,5	0,6	6,32	0,560
618 703 016	618 803 016	3	16	3,5	2,1	0,5	0,6	6,32	0,640
618 703 018	618 803 018	3	18	3,5	2,1	0,5	0,6	6,32	0,720
618 703 020	618 803 020	3	20	3,5	2,1	0,5	0,6	6,32	0,800
618 703 022	618 803 022	3	22	3,5	2,1	0,5	0,6	6,32	0,880
618 703 024	618 803 024	3	24	3,5	2,1	0,5	0,6	6,32	0,960
618 703 026	618 803 026	3	26	3,5	2,1	0,5	0,6	6,32	1,04
618 703 028	618 803 028	3	28	3,5	2,1	0,5	0,6	6,32	1,12
618 703 030	618 803 030	3	30	3,5	2,1	0,5	0,6	6,32	1,20
618 703 032	618 803 032	3	32	3,5	2,1	0,5	0,6	6,32	1,28
618 703 036	618 803 036	3	36	3,5	2,1	0,5	0,6	6,32	1,44
618 703 040	618 803 040	3	40	3,5	2,1	0,5	0,6	6,32	1,60

Product No. Spring steel	Product No. Stainless	d_1* mm	l mm	$d_{1\,max}$ mm	d_2 mm	a mm	s mm	F** kN	Weight g
618 703 506	618 803 506	3,5	6	4	2,3	0,6	0,75	9,06	0,285
618 703 508	618 803 508	3,5	8	4	2,3	0,6	0,75	9,06	0,380
618 703 510	618 803 510	3,5	10	4	2,3	0,6	0,75	9,06	0,475
618 703 512	618 803 512	3,5	12	4	2,3	0,6	0,75	9,06	0,570
618 703 514	618 803 514	3,5	14	4	2,3	0,6	0,75	9,06	0,665
618 703 516	618 803 516	3,5	16	4	2,3	0,6	0,75	9,06	0,760
618 703 518	618 803 518	3,5	18	4	2,3	0,6	0,75	9,06	0,855
618 703 520	618 803 520	3,5	20	4	2,3	0,6	0,75	9,06	0,950
618 703 522	618 803 522	3,5	22	4	2,3	0,6	0,75	9,06	1,05
618 703 524	618 803 524	3,5	24	4	2,3	0,6	0,75	9,06	1,14
618 703 526	618 803 526	3,5	26	4	2,3	0,6	0,75	9,06	1,24
618 703 528	618 803 528	3,5	28	4	2,3	0,6	0,75	9,06	1,33
618 703 530	618 803 530	3,5	30	4	2,3	0,6	0,75	9,06	1,43
618 703 532	618 803 532	3,5	32	4	2,3	0,6	0,75	9,06	1,52
618 703 536	618 803 536	3,5	36	4	2,3	0,6	0,75	9,06	1,71
618 703 540	618 803 540	3,5	40	4	2,3	0,6	0,75	9,06	1,90
618 704 006	618 804 006	4	6	4,6	2,8	0,65	0,8	11,2	0,36
618 704 008	618 804 008	4	8	4,6	2,8	0,65	0,8	11,2	0,48
618 704 010	618 804 010	4	10	4,6	2,8	0,65	0,8	11,2	0,60
618 704 012	618 804 012	4	12	4,6	2,8	0,65	0,8	11,2	0,72
618 704 014	618 804 014	4	14	4,6	2,8	0,65	0,8	11,2	0,84
618 704 016	618 804 016	4	16	4,6	2,8	0,65	0,8	11,2	0,96
618 704 018	618 804 018	4	18	4,6	2,8	0,65	0,8	11,2	1,08
618 704 020	618 804 020	4	20	4,6	2,8	0,65	0,8	11,2	1,20
618 704 022	618 804 022	4	22	4,6	2,8	0,65	0,8	11,2	1,32
618 704 024	618 804 024	4	24	4,6	2,8	0,65	0,8	11,2	1,44
618 704 026	618 804 026	4	26	4,6	2,8	0,65	0,8	11,2	1,56
618 704 028	618 804 028	4	28	4,6	2,8	0,65	0,8	11,2	1,68
618 704 030	618 804 030	4	30	4,6	2,8	0,65	0,8	11,2	1,80
618 704 032	618 804 032	4	32	4,6	2,8	0,65	0,8	11,2	1,92
618 704 036	618 804 036	4	36	4,6	2,8	0,65	0,8	11,2	2,16
618 704 040	618 804 040	4	40	4,6	2,8	0,65	0,8	11,2	2,40
618 704 045	618 804 045	4	45	4,6	2,8	0,65	0,8	11,2	2,70
618 704 050	618 804 050	4	50	4,6	2,8	0,65	0,8	11,2	3,00
618 705 006	618 805 006	5	6	5,6	3,4	0,9	1	17,5	0,56
618 705 008	618 805 008	5	8	5,6	3,4	0,9	1	17,5	0,75
618 705 010	618 805 010	5	10	5,6	3,4	0,9	1	17,5	0,94
618 705 012	618 805 012	5	12	5,6	3,4	0,9	1	17,5	1,13
618 705 014	618 805 014	5	14	5,6	3,4	0,9	1	17,5	1,32
618 705 016	618 805 016	5	16	5,6	3,4	0,9	1	17,5	1,50
618 705 018	618 805 018	5	18	5,6	3,4	0,9	1	17,5	1,69
618 705 020	618 805 020	5	20	5,6	3,4	0,9	1	17,5	1,88
618 705 022	618 805 022	5	22	5,6	3,4	0,9	1	17,5	2,07
618 705 024	618 805 024	5	24	5,6	3,4	0,9	1	17,5	2,26
618 705 026	618 805 026	5	26	5,6	3,4	0,9	1	17,5	2,44
618 705 028	618 805 028	5	28	5,6	3,4	0,9	1	17,5	2,63
618 705 030	618 805 030	5	30	5,6	3,4	0,9	1	17,5	2,82
618 705 032	618 805 032	5	32	5,6	3,4	0,9	1	17,5	3,01
618 705 036	618 805 036	5	36	5,6	3,4	0,9	1	17,5	3,38
618 705 040	618 805 040	5	40	5,6	3,4	0,9	1	17,5	3,76
618 705 045	618 805 045	5	45	5,6	3,4	0,9	1	17,5	4,23
618 705 050	618 805 050	5	50	5,6	3,4	0,9	1	17,5	4,70
618 705 060	618 805 060	5	60	5,6	3,4	0,9	1	17,5	5,64
618 705 070	618 805 070	5	70	5,6	3,4	0,9	1	17,5	6,58

* Nominal diameter.
** Shear force. Values only apply for spring steel version, not for stainless steel.

Straight Pins, Spring-Type ISO 8752 (formerly DIN 1481), Ø 6-12 mm

Material: Spring steel, black oxide finish, oiled.
Stainless steel 1.4310 (AISI 301).

Heavy-duty hollow dowel pins. As a shaft-to-hub connection or for fixing the position of other components in relation to each other. Reusable. With oversize. The locating bore should correspond to the nominal diameter d_1, with tolerance H12.

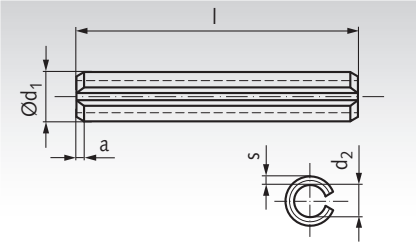

Ordering Details: e.g.: Product No. 618706010, Straight Pin ISO 8752, spring steel, 6 x 10 mm

Product No. Spring steel	Product No. Stainless	d_1* mm	l mm	$d_{1\,max}$ mm	d_2 mm	a mm	s mm	F** kN	Weight g
618 706 010	618 806 010	6	10	6,7	4	1,2	1,2	26	1,20
618 706 012	618 806 012	6	12	6,7	4	1,2	1,2	26	1,44
618 706 014	618 806 014	6	14	6,7	4	1,2	1,2	26	1,68
618 706 016	618 806 016	6	16	6,7	4	1,2	1,2	26	1,92
618 706 018	618 806 018	6	18	6,7	4	1,2	1,2	26	2,16
618 706 020	618 806 020	6	20	6,7	4	1,2	1,2	26	2,40
618 706 022	618 806 022	6	22	6,7	4	1,2	1,2	26	2,64
618 706 024	618 806 024	6	24	6,7	4	1,2	1,2	26	2,88
618 706 026	618 806 026	6	26	6,7	4	1,2	1,2	26	3,12
618 706 028	618 806 028	6	28	6,7	4	1,2	1,2	26	3,36
618 706 030	618 806 030	6	30	6,7	4	1,2	1,2	26	3,60
618 706 032	618 806 032	6	32	6,7	4	1,2	1,2	26	3,84
618 706 036	618 806 036	6	36	6,7	4	1,2	1,2	26	4,32
618 706 040	618 806 040	6	40	6,7	4	1,2	1,2	26	4,80
618 706 045	618 806 045	6	45	6,7	4	1,2	1,2	26	5,40
618 706 050	618 806 050	6	50	6,7	4	1,2	1,2	26	6,00
618 706 060	618 806 060	6	60	6,7	4	1,2	1,2	26	7,20
618 706 070	618 806 070	6	70	6,7	4	1,2	1,2	26	8,40
618 706 080	618 806 080	6	80	6,7	4	1,2	1,2	26	9,60
618 708 010	618 808 010	8	10	8,8	5,5	2	1,5	42,8	2,10
618 708 012	618 808 012	8	12	8,8	5,5	2	1,5	42,8	2,52
618 708 014	618 808 014	8	14	8,8	5,5	2	1,5	42,8	2,94
618 708 016	618 808 016	8	16	8,8	5,5	2	1,5	42,8	3,36
618 708 018	618 808 018	8	18	8,8	5,5	2	1,5	42,8	3,78
618 708 020	618 808 020	8	20	8,8	5,5	2	1,5	42,8	4,20
618 708 022	618 808 022	8	22	8,8	5,5	2	1,5	42,8	4,62
618 708 024	618 808 024	8	24	8,8	5,5	2	1,5	42,8	5,04
618 708 026	618 808 026	8	26	8,8	5,5	2	1,5	42,8	5,46
618 708 028	618 808 028	8	28	8,8	5,5	2	1,5	42,8	5,88
618 708 030	618 808 030	8	30	8,8	5,5	2	1,5	42,8	6,30
618 708 032	618 808 032	8	32	8,8	5,5	2	1,5	42,8	6,72
618 708 036	618 808 036	8	36	8,8	5,5	2	1,5	42,8	7,56
618 708 040	618 808 040	8	40	8,8	5,5	2	1,5	42,8	8,40
618 708 045	618 808 045	8	45	8,8	5,5	2	1,5	42,8	9,45
618 708 050	618 808 050	8	50	8,8	5,5	2	1,5	42,8	10,50
618 708 060	618 808 060	8	60	8,8	5,5	2	1,5	42,8	12,60
618 708 070	618 808 070	8	70	8,8	5,5	2	1,5	42,8	14,70
618 708 080	618 808 080	8	80	8,8	5,5	2	1,5	42,8	16,80

Product No. Spring steel	Product No. Stainless	d_1* mm	l mm	$d_{1\,max}$ mm	d_2 mm	a mm	s mm	F** kN	Weight g
618 710 012	618 810 012	10	12	10,8	6,5	2	2	70,2	4,43
618 710 014	618 810 014	10	14	10,8	6,5	2	2	70,2	5,17
618 710 016	618 810 016	10	16	10,8	6,5	2	2	70,2	5,90
618 710 018	618 810 018	10	18	10,8	6,5	2	2	70,2	6,64
618 710 020	618 810 020	10	20	10,8	6,5	2	2	70,2	7,38
618 710 022	618 810 022	10	22	10,8	6,5	2	2	70,2	8,12
618 710 024	618 810 024	10	24	10,8	6,5	2	2	70,2	8,86
618 710 026	618 810 026	10	26	10,8	6,5	2	2	70,2	9,59
618 710 028	618 810 028	10	28	10,8	6,5	2	2	70,2	10,33
618 710 030	618 810 030	10	30	10,8	6,5	2	2	70,2	11,07
618 710 032	618 810 032	10	32	10,8	6,5	2	2	70,2	11,81
618 710 036	618 810 036	10	36	10,8	6,5	2	2	70,2	13,28
618 710 040	618 810 040	10	40	10,8	6,5	2	2	70,2	14,76
618 710 045	618 810 045	10	45	10,8	6,5	2	2	70,2	16,61
618 710 050	618 810 050	10	50	10,8	6,5	2	2	70,2	18,45
618 710 060	618 810 060	10	60	10,8	6,5	2	2	70,2	22,14
618 710 070	618 810 070	10	70	10,8	6,5	2	2	70,2	25,83
618 710 080	618 810 080	10	80	10,8	6,5	2	2	70,2	29,52
618 710 090	618 810 090	10	90	10,8	6,5	2	2	70,2	33,21
618 710 100	618 810 100	10	100	10,8	6,5	2	2	70,2	36,90
618 712 020	-	12	20	12,8	7,5	2	2,5	104	11,36
618 712 022	-	12	22	12,8	7,5	2	2,5	104	12,50
618 712 024	-	12	24	12,8	7,5	2	2,5	104	13,63
618 712 026	-	12	26	12,8	7,5	2	2,5	104	14,77
618 712 028	-	12	28	12,8	7,5	2	2,5	104	15,90
618 712 030	-	12	30	12,8	7,5	2	2,5	104	17,04
618 712 032	-	12	32	12,8	7,5	2	2,5	104	18,18
618 712 036	-	12	36	12,8	7,5	2	2,5	104	20,45
618 712 040	-	12	40	12,8	7,5	2	2,5	104	22,72
618 712 045	-	12	45	12,8	7,5	2	2,5	104	25,56
618 712 050	-	12	50	12,8	7,5	2	2,5	104	28,40
618 712 060	-	12	60	12,8	7,5	2	2,5	104	34,08
618 712 070	-	12	70	12,8	7,5	2	2,5	104	39,76
618 712 080	-	12	80	12,8	7,5	2	2,5	104	45,44
618 712 090	-	12	90	12,8	7,5	2	2,5	104	51,12
618 712 100	-	12	100	12,8	7,5	2	2,5	104	56,80

* Nominal diameter.
** Shear force. Values only apply for spring steel version, not for stainless steel.

Mounting Example

A hole is drilled through hub and shaft and both parts are then connected with a straight pin. Usually only one side of the hub is pre-drilled, then the wheel is pushed onto the shaft and the hole is drilled through both shaft and the other side of the hub. Then the pin is driven in. This mounting method is suitable for low torques.

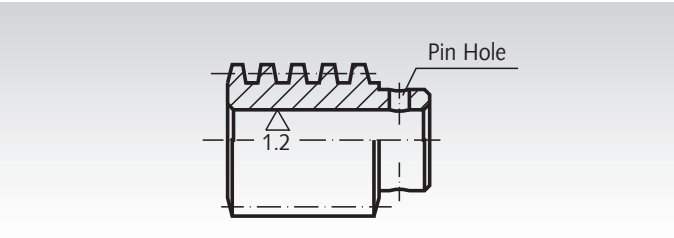

Support Pins and Location Pins according to the Old Standard DIN 6321

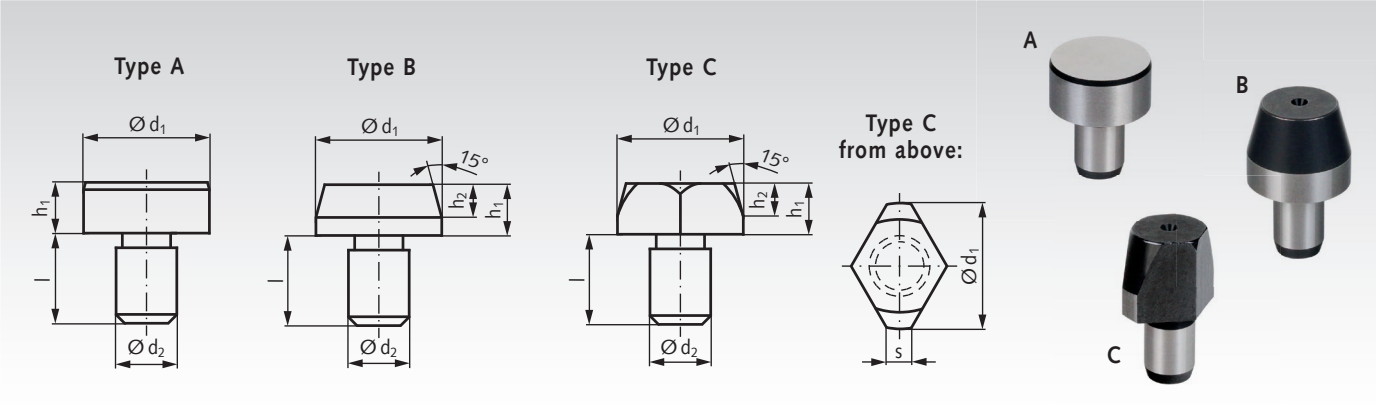

Material: Steel, hardened and ground.

These pins are mainly used in devices, machine tools, and measuring fixtures to precisely position, support, or brace workpieces.

Type A: These pins are frequently used as seating pins, stops or feet. They have no centering.

Type B: These pins are used to position workpieces and jig components in precision-fit bores. They help to position precisely drilled parts correctly. Centering in the receiving bolt is allowed according to DIN 6321.

Type C: These pins bridge tolerances in the spacing of bores. They can also be used to position a part to be aligned in only one direction. Centering in the receiving bolt is allowed according to DIN 6321.

The recommended tolerance of the mounting hole is H7.

Application example

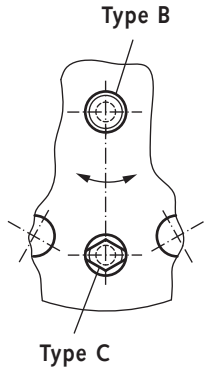

Ordering Details: e.g.: Product No. 61960605A, Support Pin Type A Ø 6 mm x 5 mm.

Support Pins Type A, cylindrical, plan

Product No.	d_1 g6 mm	d_2 g6 mm	h_1 h9 mm	l mm	Weight g
619 606 05A	6	4	5	6	1,8
619 610 06A	10	6	6	9	5,7
619 616 08A	16	8	8	12	17
619 625 10A	25	12	10	18	53

Location Pins Type B, cylindrical, with Cone

Product No. short	Product No. long	d_1 g6 mm	d_2 n6 mm	h_1 short mm	h_1 long mm	h_2 mm	l mm	Weight short g	Weight long g
619 606 07B	619 606 12B	6	4	7	12	4	6	1,7	3
619 608 10B	619 608 16B	8	6	10	16	6	9	4,9	8
619 610 10B	619 610 18B	10	6	10	18	6	9	6,9	12
619 612 10B	619 612 18B	12	6	10	18	6	9	10	17
619 616 13B	619 616 22B	16	8	13	22	8	12	22	36
619 620 15B	619 620 25B	20	12	15	25	9	18	58	73
619 625 15B	619 625 25B	25	12	15	25	9	18	66	106

Location Pins Type C, flattened

Product No. short	Product No. long	d_1 g6 mm	d_2 n6 mm	h_1 short mm	h_1 long mm	h_2 mm	l mm	s ≈ mm	Weight short g	Weight long g
619 606 07C	619 606 12C	6	4	7	12	4	6	1,0	1,3	2,2
619 608 10C	619 608 16C	8	6	10	16	6	9	1,6	4,0	5,5
619 610 10C	619 610 18C	10	6	10	18	6	9	2,5	5,6	8,9
619 612 10C	619 612 18C	12	6	10	18	6	9	2,5	7,0	11
619 616 13C	619 616 22C	16	8	13	22	8	12	3,5	17	26
619 620 15C	619 620 25C	20	12	15	25	9	18	5,0	39	55
619 625 15C	619 625 25C	25	12	15	25	9	18	5,0	49	72

Low Hexagon Nuts ISO 4035 and ISO 8675 (similar to old DIN 439)

Low hexagon nuts with metric ISO thread or fine pitch thread in steel and stainless steel.

STAINLESS

The standard DIN 439 version B was replaced by ISO 4035 / 8675. Some of these nuts have different outer dimensions (width across flats and height). But the nuts DIN 439 are still used very often. The dimensions m and s are given as maximum values in the table.

Note: Nuts from steel or stainless steel tend to stick (seizure) on threaded bars from steel or stainless. They must be well lubricated and are movable only for short time at low speed.

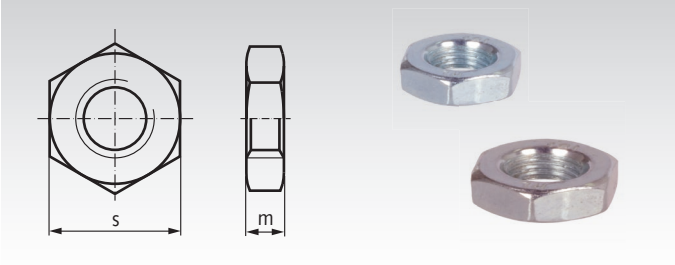

ISO 4035 with metric thread, right hand

Material: Steel, tensile strength 04, zinc plated.
Stainless steel V2A (A2), tensile strength 035.

Ordering Details: e.g.: Product No. 65200601, Hexagon Nut ISO 4035, M6, Steel

Product No. Steel	Product No. Stainless	Thread mm	Pitch mm	m mm	s mm	Weight kg p.% Stck
652 006 01	652 992 06	M6	1,0	3,2	10	0,14
652 008 01	652 992 08	M8	1,25	4	13	0,31
652 010 01	652 992 10	M10	1,5	5	16	0,54
652 012 01	652 992 12	M12	1,75	6	18	0,79
652 016 01	652 992 16	M16	2,0	8	24	1,7
652 020 01	652 992 20	M20	2,5	10	30	3,44

ISO 8675 with metric, fine thread, right hand

Material: Steel, tensile strength 04, zinc plated.
Stainless steel V2A (A2), tensile strength 035.

Ordering Details: e.g.: Product No. 65250801, Hexagon Nut ISO 8675, M8, Steel

Product No. Steel	Product No. Stainless	Thread mm	Pitch mm	m mm	s mm	Weight kg p.% Stck
652 508 01	652 508 91	M8x1	1,0	4	13	0,32
652 510 01	652 510 91	M10x1	1,0	5	16	0,53
652 512 01	652 512 91	M12x1,5	1,5	6	18	0,79
652 516 01	652 516 91	M16x1,5	1,5	8	24	1,74
652 520 01	652 520 91	M20x1,5	1,5	10	30	4,02
-	652 524 91	M24x1,5	1,5*	12	36	6,96
652 524 01	-	M24x2	2,0	12	36	6,96

* Not part of the ISO 8675.

ISO 4035 with metric thread, left hand

Material: Steel, tensile strength 04, zinc plated.

Ordering Details: e.g.: Product No. 65230601, Hexagon Nut ISO 4035, M6, Steel, left

Product No. Steel	Thread mm	Pitch mm	m mm	s mm	Weight kg p.% Stck
652 306 01	M6	1,0	3,2	10	0,13
652 308 01	M8	1,25	4	13	0,3
652 310 01	M10	1,5	5	16	0,68
652 312 01	M12	1,75	6	18	0,78
652 316 01	M16	2,0	8	24	2,28
652 320 01	M20	2,5	10	30	3,46

Example of Application

Flat hex nuts are ideal for applications with short threads and ensure a minimum adjustment path.

In combination with locking bolts, locking latches, positioning sleeves or rod ends, they offer particular advantages when two nuts are to be locked.

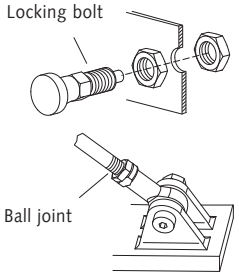

Self-Locking Nuts U-NUT®, with Metric Thread, with Stainless Steel Locking Insert, Self-Locking

Material: Body: Steel, chrome-plated (Cr3).
Lock: Stainless steel. Tensile strength 8.

U-NUT® locknuts with metric ISO thread prevent the screws from loosening when the axial force decreases. The metal material used for the lock gives the nuts greater resistance to heat and cold than polyamide locknuts. The nuts are reusable. The dimensions m and s are given in the table as maximum values.

Ordering Details: e.g: Product No. 65230508, Self-locking nut U-NUT®, M5

Product No.	Thread mm	Pitch mm	m mm	s mm	h mm	e mm	Weight g
652 305 08	M5	0,8	3,9	8	4,6	9,2	1,2
652 306 08	M6	1	4,2	10	5,1	11,5	2,1
652 308 08	M8	1,25	6,1	13	7,3	15	5,1
652 310 08	M10	1,5	7,1	17	8,3	19,6	10
652 312 08	M12	1,75	9	19	10,5	21,9	15,2
652 314 08	M14	2	11	22	12,5	25,4	24
652 316 08	M16	2	13	24	14,5	27,7	31,5

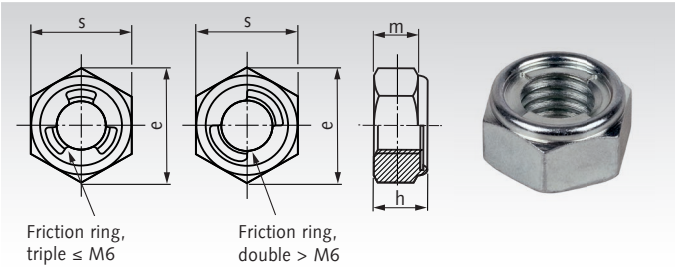

Operating Principle

When the friction ring comes into contact with the screw, a force is transmitted to the friction ring. The reaction force created by the pressure on the thread leads to a frictional torque that prevents movement.

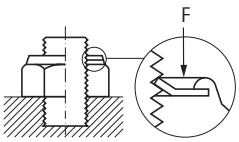

Notes and Tightening Torques

- Use metric screws with tolerance class 6g.
- Do not fit the bolts on the friction ring side.
- Do not reuse nuts if the friction ring is deformed.
- At least two thread pitches must protrude.
- Observe the tightening torques of the screws.

Thread mm	Tightening torque Nm	Turn-on Torque Nm	Turn-off Torque Nm
M5	8,7	0,4	0,3
M6	15	1,0	0,8
M8	36	1,5	1,3
M10	71	1,9	1,6
M12	125	3,0	2,7
M14	200	3,7	3,2
M16	310	4,6	4,0

Hexagon Socket Set Screws ISO 4026 (formerly DIN 913) with Flat Point

Material: Steel, black oxide finish, hardness class 45H.
Stainless steel A2, hardness class 21H.

STAINLESS

Set screws with truncated cone and flat surface (dimension d_p).
To use as a grub screw for fixing an element on a shaft.
The flat surface is gentle on the shaft.

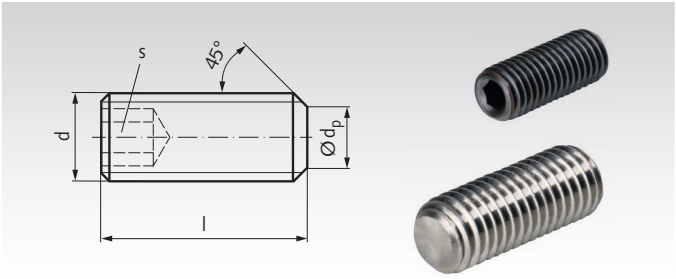

Ordering Details: e.g.: Product No. 61920305, Set Screw ISO 4026, Steel, M3 x 5mm

Product No. Steel 45H	Product No. Stainless	d mm	l mm	d_p min. mm	d_p max. mm	s mm	Weight g
619 203 05	619 303 05	M3	5	1,75	2	1,5	0,17
619 203 06	619 303 06	M3	6	1,75	2	1,5	0,21
619 203 08	619 303 08	M3	8	1,75	2	1,5	0,30
619 203 10	619 303 10	M3	10	1,75	2	1,5	0,39
619 203 12	619 303 12	M3	12	1,75	2	1,5	0,47
619 203 16	-	M3	16	1,75	2	1,5	0,64
619 204 05	619 304 05	M4	5	2,25	2,5	2	0,31
619 204 06	619 304 06	M4	6	2,25	2,5	2	0,38
619 204 08	619 304 08	M4	8	2,25	2,5	2	0,53
619 204 10	619 304 10	M4	10	2,25	2,5	2	0,68
619 204 12	619 304 12	M4	12	2,25	2,5	2	0,83
619 204 16	619 304 16	M4	16	2,25	2,5	2	1,13
619 204 20	619 304 20	M4	20	2,25	2,5	2	1,42
619 205 05	619 305 05	M5	5	3,2	3,5	2,5	0,42
619 205 06	619 305 06	M5	6	3,2	3,5	2,5	0,54
619 205 08	619 305 08	M5	8	3,2	3,5	2,5	0,78
619 205 10	619 305 10	M5	10	3,2	3,5	2,5	1,02
619 205 12	619 305 12	M5	12	3,2	3,5	2,5	1,26
619 205 16	619 305 16	M5	16	3,2	3,5	2,5	1,74
619 205 20	619 305 20	M5	20	3,2	3,5	2,5	2,22
619 205 25	619 305 25	M5	25	3,2	3,5	2,5	2,82
619 206 06	619 306 06	M6	6	3,7	4	3	0,74
619 206 08	619 306 08	M6	8	3,7	4	3	1,09
619 206 10	619 306 10	M6	10	3,7	4	3	1,44
619 206 12	619 306 12	M6	12	3,7	4	3	1,79
619 206 16	619 306 16	M6	16	3,7	4	3	2,49
619 206 20	619 306 20	M6	20	3,7	4	3	3,19
619 206 25	619 306 25	M6	25	3,7	4	3	4,07
619 206 30	619 306 30	M6	30	3,7	4	3	4,97
619 208 08	619 308 08	M8	8	5,2	5,5	4	1,88
619 208 10	619 308 10	M8	10	5,2	5,5	4	2,51
619 208 12	619 308 12	M8	12	5,2	5,5	4	3,14
619 208 16	619 308 16	M8	16	5,2	5,5	4	4,40
619 208 20	619 308 20	M8	20	5,2	5,5	4	5,66
619 208 25	619 308 25	M8	25	5,2	5,5	4	7,24
619 208 30	619 308 30	M8	30	5,2	5,5	4	8,81
619 208 35	619 308 35	M8	35	5,2	5,5	4	10,41
619 208 40	619 308 40	M8	40	5,2	5,5	4	12,00
619 210 10	619 310 10	M10	10	6,64	7	5	3,72
619 210 12	619 310 12	M10	12	6,64	7	5	4,73
619 210 16	619 310 16	M10	16	6,64	7	5	6,73
619 210 20	619 310 20	M10	20	6,64	7	5	8,72
619 210 25	619 310 25	M10	25	6,64	7	5	11,20
619 210 30	619 310 30	M10	30	6,64	7	5	13,70
619 210 35	619 310 35	M10	35	6,64	7	5	16,21
619 210 40	619 310 40	M10	40	6,64	7	5	18,72
619 210 45	619 310 45	M10	45	6,64	7	5	21,23
619 210 50	619 310 50	M10	50	6,64	7	5	23,74

Loctite® thread locking and bonding products page 1034.

Precision Locknuts MZM with Locking Pins

Material: Body of the nut from tempered steel.

Reusable shaft nut with integrated locking devices.
Special features of the shaft nut are the locking inserts from brass. These inserts are threaded and thus does not cause any damage. The locking inserts are pressed against the shaft thread with locking screws. Designed for applications, which require a high precision and trustable locking.

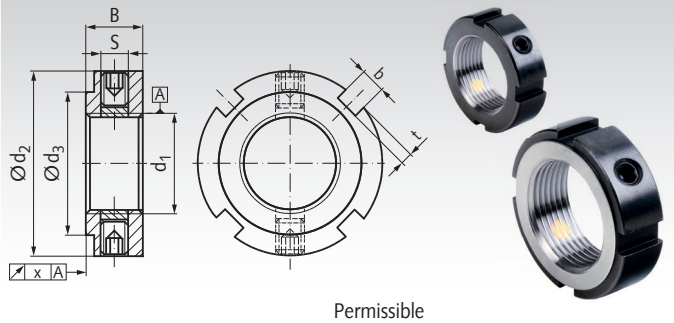

Ordering Details: e.g.: Product No. 65359006, Locknut MZM 6

Product No.	Type	Thread d_1 mm	d_2 mm	d_3 min. mm	B mm	b mm	t mm	S mm	T_{AS} 1) Nm	x mm	Permissible Axial Load kN	Weight g
653 590 06	MZM 6	M6x0,5	16	11	8	3	2	M4	1	0,005	17	8,1
653 590 08	MZM 8	M8x0,75	16 2)	11	8	3	2	M4	1	0,005	23	7,4
653 590 10	MZM 10	M10x1	18 2)	14	8	3	2	M4	1	0,005	31	14
653 590 12	MZM 12	M12x1	22	18	8	3	2	M4	1	0,005	38	14,5
653 590 15	MZM 15	M15x1	25	21	8	3	2	M4	1	0,005	50	17,4
653 590 17	MZM 17	M17x1	28	23	10	4	2	M5	3	0,005	57	27,3
653 590 20	MZM 20	M20x1	32	27	10	4	2	M5	3	0,005	69	35
653 590 25	MZM 25	M25x1,5	38	33	12	5	2	M6	5	0,005	90	54
653 590 30	MZM 30	M30x1,5	45	40	12	5	2	M6	5	0,005	112	76,5
653 590 35	MZM 35	M35x1,5	52	47	12	5	2	M6	5	0,005	134	101
653 590 40	MZM 40	M40x1,5	58	52	14	6	2,5	M6	5	0,005	157	142
653 590 45	MZM 45	M45x1,5	65	59	14	6	2,5	M6	5	0,005	181	190
653 590 50	MZM 50	M50x1,5	70	64	14	6	2,5	M6	5	0,005	205	194
653 590 55	MZM 55	M55x2	75	68	16	7	3	M6	5	0,005	229	243
653 590 60	MZM 60	M60x2	80	73	16	7	3	M6	5	0,005	255	264
653 590 65	MZM 65	M65x2	85	78	16	7	3	M6	5	0,005	280	270
653 590 70	MZM 70	M70x2	92	85	18	8	3,5	M8	15	0,005	305	381
653 590 75	MZM 75	M75x2	98	90	18	8	3,5	M8	15	0,005	331	423
653 590 80	MZM 80	M80x2	105	95	18	8	3,5	M8	15	0,005	355	492
653 590 85	MZM 85	M85x2	110	102	18	8	3,5	M8	15	0,005	385	524
653 590 90	MZM 90	M90x2	120	108	20	10	4	M8	15	0,005	410	747
653 591 00	MZM 100	M100x2	130	120	20	10	4	M8	15	0,005	465	830

1) Fastening torque of locking screw.
2) Locking screw sticks out 0.5 mm.

Split Hubs / Clamp Hubs

Material: Steel, sintered, steam oxidized, black.
Screw: Steel, 8.8.
Stainless steel 1.4404, (AISI 316L) sintered.
Screw: Stainless steel 1.4301 (AISI 304), A2-70.

STAINLESS

Split Hubs enable quick and easy mounting of gear lever handels or others on shafts, without additional machining.
So, the handle can be adjusted to the desired position.
For optimal torque transmission, a shaft tolerance of up to h11 is recommended. Keyway on request.

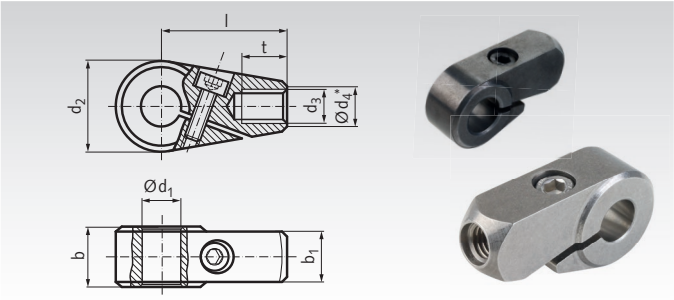

Ordering Details: e.g.: Product No. 666061024, Split Hub, Steel, Bore 10mm

Product No. Steel	Product No. Stainless Steel	d_1 mm	d_2 mm	d_3 mm	d_4 mm	$b^{\pm 0,2}$ mm	b_1 mm	l mm	t mm	Weight g
666 061 024	**666 961 024**	10	24	M8	10	15,5	13	36	11	63
666 061 224	**666 961 224**	12	24	M8	10	15,5	13	36	11	74
666 061 228	**666 961 228**	12	28	M10	12	17,5	15	41	14	113
666 061 428	**666 961 428**	14	28	M10	12	17,5	15	41	14	107
666 061 432	**666 961 432**	14	32	M12	14	19,5	17	45	16	164
666 061 632	**666 961 632**	16	32	M12	14	19,5	17	45	16	160

Spring Plungers with Bolt from Plastic, with Internal Hexagon

Material type black oxided: Steel. Bolt from white POM.
Spring stainless steel. Standard spring tension.

Material type stainless: Stainless steel 1.4305 (AISI 303).
Bolt from white POM.
Spring stainless steel. Standard spring tension.

Temperature range: -30°C bis +50°C.

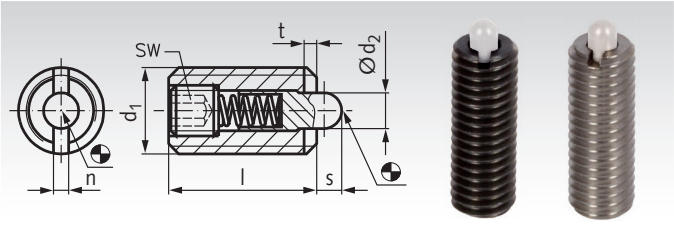

Ordering Details: e.g.: Product No. 65465400P, Spring Plunger M4

Product No. black oxided	Product No. stainless	d_1 mm	d_2 mm	l mm	n mm	s mm	t mm	SW mm	Spring Tension* Initial N	Spring Tension* End N	Weight g
654 654 00P	654 996 54P	M4	1,5	15	0,6	1,5	0,6	1,3	4,5	16	0,9
654 655 00P	654 996 55P	M5	2,4	18	1,2	2,3	0,8	1,5	6	19	1,5
654 656 00P	654 996 56P	M6	2,7	20	1,3	2,5	0,9	2	6	19	2,3
654 658 00P	654 996 58P	M8	3,5	22	1,5	3	1,4	2,5	10	39	5
654 660 00P	654 996 60P	M10	4	22	1,5	3	1,4	3	10	39	8,1
654 662 00P	654 996 62P	M12	6	28	2,7	4	2	4	12	53	14
654 666 00P	654 996 66P	M16	7,5	32	3,2	5	2,5	5	45	100	31
654 670 00P	654 996 70P	M20	10	40	3,7	7	3	6	58	140	77
654 674 00P	654 996 74P	M24	12	52	3,7	10	3	8	80	180	143

* Statistical average.

Spring Plungers with Bolt from Plastic, with Internal Hexagon, Strong Spring Tension

Material: Stainless steel 1.4305 (AISI 303).
Bolt from white POM. Spring stainless steel.
Strong spring tension.

Temperature range: -30°C bis +50°C.

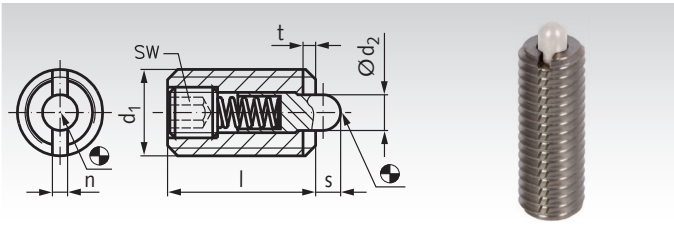

Ordering Details: e.g.: Product No. 65499655PV, Spring plunger, strong, M5

Product No. stainless	d_1 mm	d_2 mm	l mm	n mm	s mm	t mm	SW mm	Spring Tension* Initial N	Spring Tension* End N	Weight g
654 996 55PV	M5	2,4	18	1,2	2,3	0,8	1,5	15	44	1,9
654 996 56PV	M6	2,7	20	1,3	2,5	0,9	2	20	50	3,6
654 996 58PV	M8	3,5	22	1,5	3	1,4	2,5	26	70	6,6
654 996 60PV	M10	4	22	1,5	3	1,4	3	26	70	11
654 996 62PV	M12	6	28	2,7	4	2	4	51	122	20
654 996 66PV	M16	7,5	32	3,2	5	2,5	5	72	164	43
654 996 70PV	M20	10	40	3,7	7	3	6	93	211	75
654 996 74PV	M24	12	52	3,7	10	3	8	86	247	146

* Statistical average.

Note

Used for fixation or as device to press something in or push it out. The spring plungers can be mounted and demounted using the internal hexagon or the slot.

Precision Levelling Elements, Steel and Stainless Steel

Material: Steel, black oxided, spherical washer case-hardened.
Stainless steel 1.4305 (AISI 303),
spherical washer 1.4305 (AISI 303).
Screw DIN 912 stainless steel A2-70.
Washer DIN 433 Stainless Steel 1.4301 (AISI 304).

STAINLESS

For levelling and aligning in machines and systems. Consisting of levelling screw, hexagon socket head cap screw with washer and spherical washer. After alignment, the screw is tightened firmly with the assembly tool, whereby the levelling screw is spread by the ball washer underneath and thus secured against twisting.

Temperature range: -40°C to +175°C.

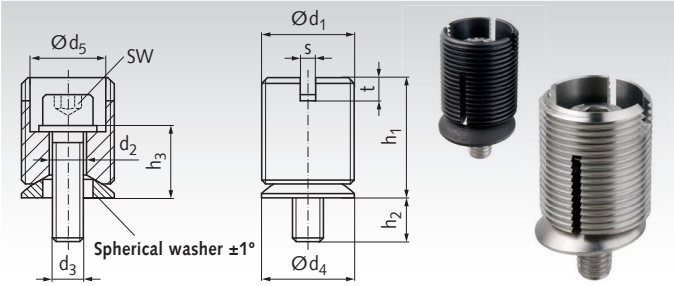

Ordering Details: e.g: Product No. 68654012, Levelling Element M12x1, Steel

Product No. Steel	Product No. Stainless Steel	d_1 mm	d_2 mm	d_3 mm	d_4 mm	d_5 mm	h_1 mm	h_2 mm	h_3 mm	s mm	SW mm	t mm	$w_{max.}$* mm	$x_{min.}$* mm	F** kN	Weight g
686 540 12	**686 540 12A2**	M12x1	4,5	M4	12	9,1	19,1	10,9	9,1	2	3	3	8	8	4,4	10
686 540 18	**686 540 18A2**	M18x1	7	M6	17	12,6	26,8	10,1	14,9	2	5	3	13	12	10	40
686 540 24	**686 540 24A2**	M24x1,5	9	M8	24	19,6	31,1	11,3	18,7	4	6	6	16	16	27	70
686 540 30	**686 540 30A2**	M30x1,5	13	M12	30	25,6	32,6	20,4	19,6	4	10	6	17	20	40	130
686 540 36	**686 540 36A2**	M36x1,5	18	M16	36	31,6	45,7	15,8	24,2	4	14	6	19	24	70	240

* See application example below. ** Static load capacity.

Precision Levelling Elements with captive Spherical Washer, Stainless Steel

Material: Stainless Steel 1.4305 (AISI 303).
Screw DIN 912 Stainless Steel A2-70.
Washer DIN 433 Stainless Steel 1.4301 (AISI 304).

STAINLESS

For levelling and aligning in machines and systems. Consisting of levelling screw, hexagon socket head cap screw with washer and spherical washer. The levelling screw and spherical washer are captively connected to each other. After alignment, the screw is tightened firmly with the assembly tool, whereby the levelling screw is spread by the ball washer underneath and thus secured against twisting.

Temperature range: -40°C to +175°C.

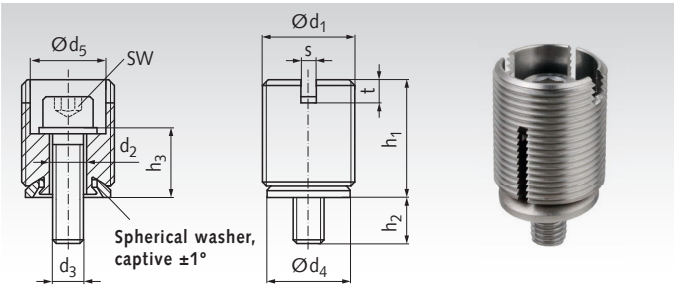

Ordering Details: e.g: Product No. 68654112, Levelling Element M12x1, Stainless Steel

Product No.	d_1 mm	d_2 mm	d_3 mm	d_4 mm	d_5 mm	h_1 mm	h_2 mm	h_3 mm	s mm	SW mm	t mm	$w_{max.}$* mm	$x_{min.}$* mm	F** kN	Weight g
686 541 12	M12x1	4,5	M4	10,5	9,1	19,4	10,6	9,4	2	3	3	8	8	4,4	10
686 541 18	M18x1	7	M6	16	12,6	27,3	9,6	15,4	2	5	3	13	12	10	40
686 541 24	M24x1,5	9	M8	21,5	19,6	30,1	12,3	17,7	4	6	6	16	16	27	70

* See application example below. ** Static load capacity.

Assembly Tools for Precision Levelling Elements

Material: Steel, black oxide finish, surface hardened.

For adjusting the levelling elements. The mounting tool has an external hexagon at the upper end, which is used with a ring spanner to turn the levelling screw. The levelling screw is turned to the desired position with the assembly tool and held in place. The hexagon socket locking screw is then tightened with a hexagon spanner to fix the setting.

Assembly example:

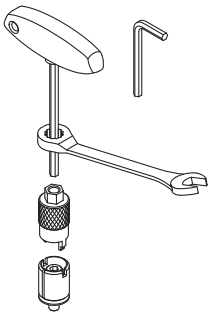

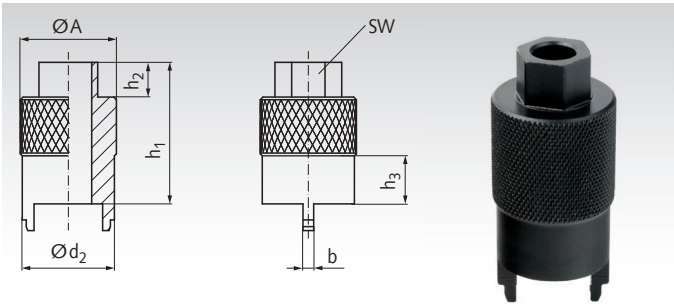

Ordering Details: e.g: Product No. 68654012M, Assembly Tool

Product No.	A mm	b mm	d_2 mm	h_1 mm	h_2 mm	h_3 mm	SW mm	usable for d_1 mm	Torque max. Nm	Weight g
686 540 12M	12	2	11	35	7	6	8	M12x1	20	20
686 540 18M	18	2	17	39	8	9	11	M18x1	50	60
686 540 24M	24	4	22,5	43	9	12	13	M24x1,5	75	110
686 540 30M	30	4	28,5	48	11	15	17	M30x1,5	100	160
686 540 36M	36	4	34,5	53	13	18	22	M36x1,5	150	260

Application example:

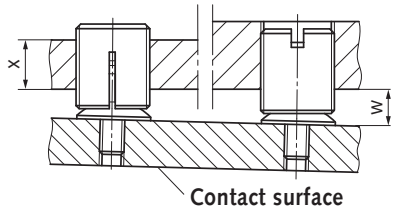

Countersunk Washers

Material: Steel, turned, black oxide finish.
Stainless steel 1.4305 (AISI 303), turned, matte shot-blasted.

STAINLESS

Standard countersunk washers for axial securing. They are fastened to the end faces of shaft ends using countersunk screws DIN EN ISO 2009 (ex DIN 7991) or DIN EN ISO 10642 (ex DIN 963).

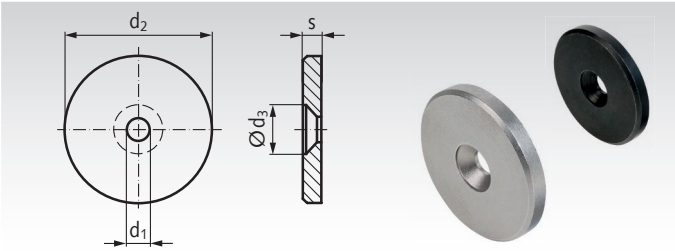

Ordering Details: e.g.: Product No. 65310012, countersunk washer for M3, diameter 12mm, steel, turned, black oxide finish

Product No. Steel	Product No. Stainless Steel	for Screws Size	d_1 mm	d_2 mm	d_3 mm	s mm	Weight g
653 100 12	653 100 12A2	M3	3,2	12	6,5	2,3	1,5
653 100 16	653 100 16A2	M4	4,3	16	8,5	3	3,4
653 100 20	653 100 20A2	M4	4,3	20	8,5	3	5,7
653 100 22	653 100 22A2	M5	5,3	22	10,3	3,5	7,8
653 100 25	653 100 25A2	M5	5,3	25	10,3	3,5	10,4
653 100 28	653 100 28A2	M5	5,3	28	10,3	3,5	13,3
653 100 32	653 100 32A2	M6	6,4	32	12,3	4	19,7
653 100 36	653 100 36A2	M6	6,4	36	12,3	4	25,4
653 100 40	653 100 40A2	M6	6,4	40	12,3	5	39,8
653 100 45	653 100 45A2	M6	6,4	45	12,3	6	61,2
653 100 52	653 100 52A2	M6	6,4	52	12,3	6	82,6

Example of use

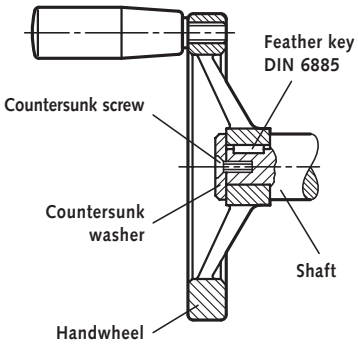

Shim rings DIN 988 at maedler.de

Loctite® thread locking and bonding products at maedler.de.

Captive C-Washers DIN 6371

Material: Steel, heat-treated, black oxide finish.
Pan head screw DIN 923, steel, 5.8, black oxide finish.

Swivelable C-washers for transferring the clamping force of a bolt or nut to a workpiece. The slotted pan head screw DIN 923 is included in delivery and serves as pivot point and loss protection. After releasing the clamping, the C-washer can be swiveled away from the workpiece.

The pan head screw can be inserted from both sides. This means, that the C-washer can be used to swivel to the right or left side.

Ordering Details: e.g.: Product No. 65520138, Captive C-washer, outer diameter 38 mm

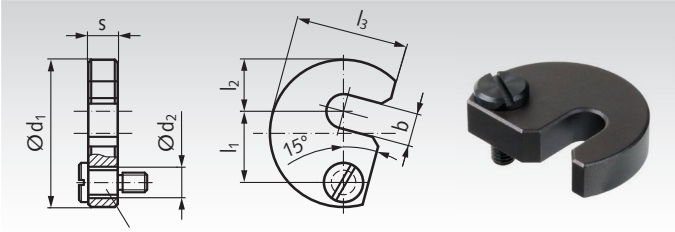

Flat head screw DIN 923

Product No.	Screw DIN 923	b mm	d_1 mm	d_2 mm	d_3 mm	l_1 mm	l_2 mm	l_3 mm	l_4 mm	$s_{-0,5}$ mm	Weight g
655 201 38	M6x10	7,5	38	9	6	19,6	11	29	19	9,8	66
655 201 43	M6x10	9,5	43	9	8	21,6	14	32,5	21	9,8	81
655 201 48	M6x10	11,5	48	9	10	23,6	17	36,5	23	9,8	99
655 201 61	M8x12	13,5	61	11	12	29,6	22	45	29	11,8	192
655 201 68	M8x12	17,5	68	11	16	33,6	25	50	33	11,8	229
655 201 74	M8x12	21,5	74	11	20	36,6	28	55	36	11,8	265
655 201 82	M8x16	25,5	82	11	24	40,6	32	62	40	15,8	430
655 201 97	M8x16	32,0	97	11	30	49,0	39	73	48	15,8	584

Mounting Example

d_3 = customer-side bolt

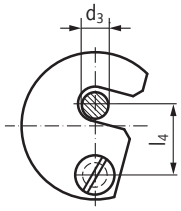

C-Washers similar to DIN 6372

Material: Steel, case hardened, black oxide finish.

C-washers for transferring the clamping force of a bolt or nut to a workpiece. After releasing the clamping force, the C-washer can be pulled away from the workpiece.

The cylindrical washers are knurled and dimensionally almost conform to DIN 6372.

Ordering Details: e.g.: Product No. 65520222,C-washer, outer diameter 22 mm

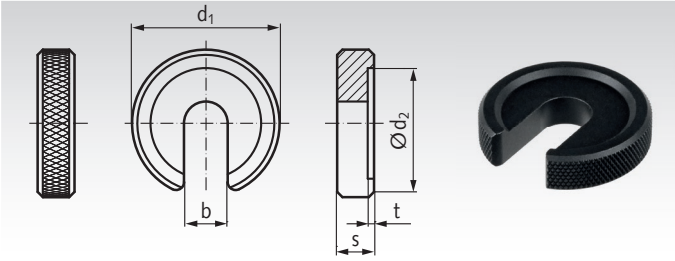

Product No.	for Screws Size	b mm	d_1 mm	d_2 mm	s mm	t mm	Weight g
655 202 22	M6	6,2	22	16	6	0,8	13
655 202 28	M8	8,3	28	21	7	1,0	24
655 202 34	M10	10,4	34	25	8	1,2	38
655 202 40	M12	12,5	40	30	9	1,8	57
655 202 56	M16	16,5	56	37	12	1,8	164

Mounting Example

Shim rings DIN 988 auf maedler.de

Loctite® thread locking and bonding products at maedler.de.

Shackles, straight, Commercial Version

Material: Steel forged, zinc-plated.
Stainless Steel V4A (A4) forged.

- Cost-effective version without CE marking.
- For example for fastening round steel chains or wire ropes.
- Not permitted as lifting device or in safety-relevant areas.

Temperature range: -20°C to +200°C.

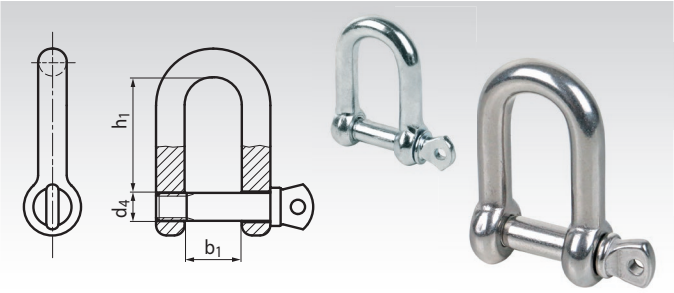

Ordering Details: e.g.: Product No. 65468806V, Shackle straight, zinc-plated

Product No. zinc-plated	Product No. Stainless	Nominal Size mm	Nominal Size inch	b_1 mm	d_4 mm	h_1 mm	Load Bearing Capacity WLL kg	Weight g
654 688 06V	654 688 06A4	6	1/4“	12	6	24	100	30
654 688 08V	654 688 08A4	8	5/16“	16	8	32	200	70
654 688 10V	654 688 10A4	10	3/8“	20	10	40	320	130
654 688 11V	-	11	7/16“	22	11	44	400	170
654 688 12V	654 688 12A4	12	1/2“	24	12	48	500	240
654 688 14V	-	14	9/16“	28	14	56	600	350
654 688 16V	654 688 16A4	16	5/8“	32	16	64	800	500
654 688 19V	-	19	3/4“	38	19	74	1100	800

Shackles, curved, Commercial Version

Material: Steel forged, zinc-plated.
Stainless Steel V4A (A4) forged.

- Cost-effective version without CE marking.
- For example for fastening round steel chains or wire ropes.
- Not permitted as lifting device or in safety-relevant areas.

Temperature range: -20°C to +200°C.

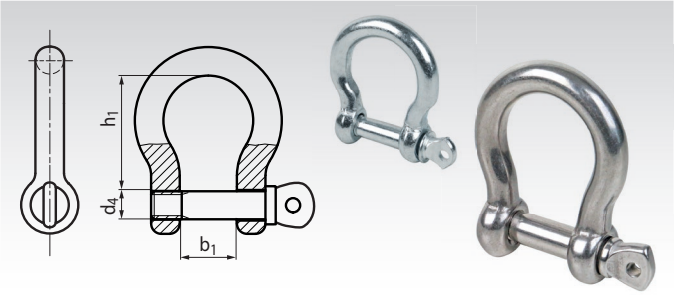

Ordering Details: e.g.: Product No. 65468906V, Shackle curved, zinc-plated

Product No. zinc-plated	Product No. Stainless	Nominal Size mm	Nominal Size inch	b_1 mm	d_4 mm	h_1 mm	Load Bearing Capacity WLL kg	Weight g
654 689 06V	654 689 06A4	6	1/4“	12	6	24	100	30
654 689 08V	654 689 08A4	8	5/16“	16	8	32	200	70
654 689 10V	654 689 10A4	10	3/8“	20	10	40	320	130
654 689 11V	-	11	7/16“	22	11	44	400	170
654 689 12V	654 689 12A4	12	1/2“	24	12	48	500	240
654 689 14V	-	14	9/16“	28	14	56	600	350
654 689 16V	654 689 16A4	16	5/8“	32	16	64	800	500
654 689 19V	-	19	3/4“	38	19	74	1100	800

Note

These shackles are not according to DIN 82101.
They are not CE marked and must not be used for lifting.

Threads d4 is metric size or inch size, depending on the manufacturer.

WLL = Work Load Limit.

Bevel Gearboxes KEK Version B

Angular drives with high torques at very low dimensions.
Suitable in a wide variety of applications
8 Sizes. Ratio 1:1.

Housing: Aluminium, silver anodized. Sealed against lubricant leaks, protected against dust. Can be mounted in any position.
Gearing: Bevel gears from steel, surface hardened.
Bearing: Ball bearings with rubber seal RS.
Lubrication: Maintenance free grease lubrication.
Angular backlash: 3°+/-1°.
Operating time: 20% at 5 min.
Life time: 1,000 hours at max. performance at speed 500 min^{-1} and operating time 20%.
Permiss. operating temperature: -20° to +60°C.

Ordering Details: e.g.: Product No. 410001200 Bevel Gearbox KEK, Version B, Size 0

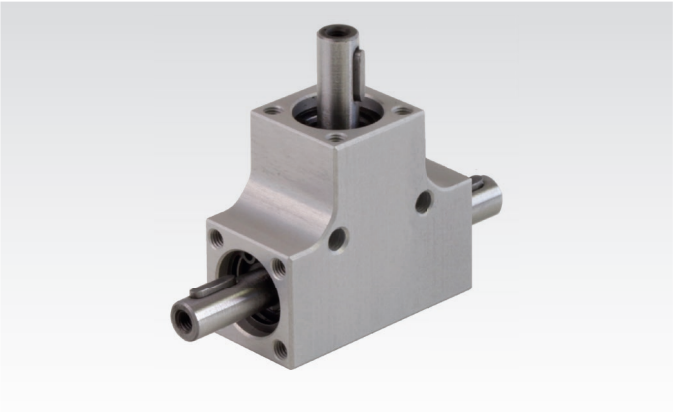

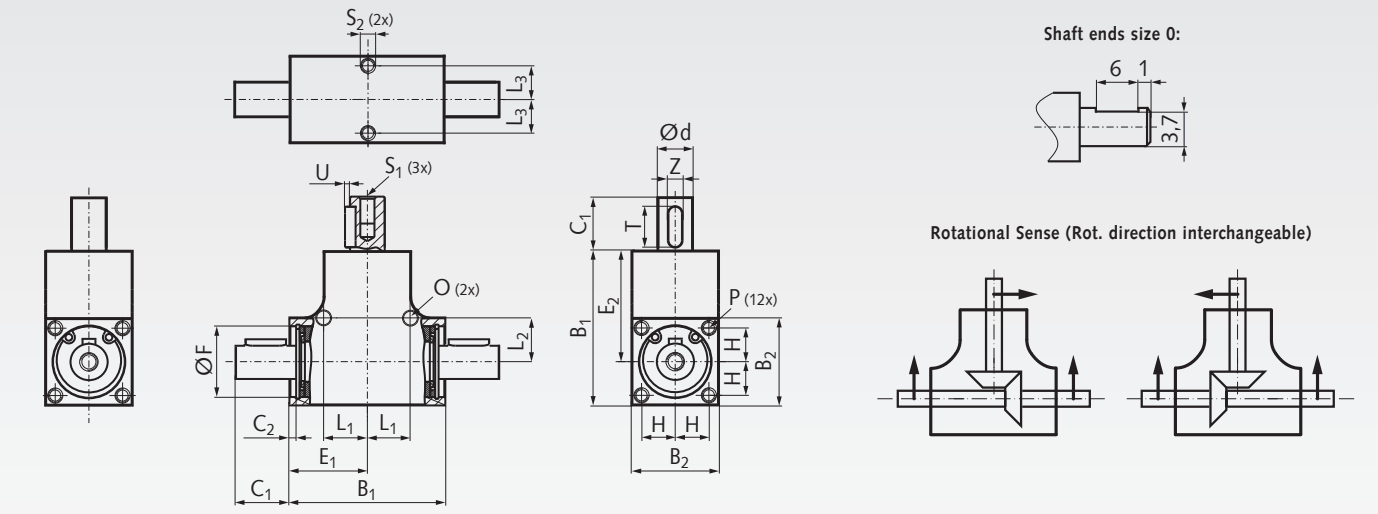

Performance Data

Product No.	Size	Shafts Ø d^{j6} mm	Ratio i	Permittable Torque at Speed 100 min^{-1} Nm	500 min^{-1} Nm	1.000 min^{-1} Nm	Permittable Power at Speed 100 min^{-1} W	500 min^{-1} W	1.000 min^{-1} W	Shaft Load F_R* N	F_A** N	Weight g
410 002 00	0	4	1 : 1	0,28	0,08	0,04	2,96	4,16	4,16	48	48	30
410 002 01	1	6	1 : 1	0,35	0,1	0,05	3,7	5,2	5,2	60	60	60
410 002 02	2	6	1 : 1	0,75	0,3	0,15	7,9	15,7	15,7	100	100	70
410 002 03	3	8	1 : 1	2,5	1	0,5	26,2	52,4	52,4	120	120	130
410 002 04	4	8	1 : 1	4	1,5	0,75	41,9	78,5	78,5	140	140	170
410 002 05	5	8	1 : 1	5	2	1	52	105	105	240	240	190
410 002 06	6	10	1 : 1	8	3	1,5	84	157	157	550	550	240
410 002 07	7	12	1 : 1	10	4	2	105	209	209	550	550	400

* Radial load F_R max. (on middle of the Output Shaft) for $F_A = 0$. ** Axial load F_A max. for $F_R = 0$.

Dimensiones

Size	B_1 mm	B_2 mm	C_1 mm	C_2 mm	d^{j6} mm	E_1 mm	E_2 mm	F mm	H mm	L_1 mm	L_2 mm	L_3 mm	O mm	P mm	S_1 mm	S_2 mm	T mm	U mm	Z mm
0	26	15	10	1,1	4	13	18,5	11	5,5	8	8	5,5	2,6	M2,5 x 4	M2,5 x 5	M2,5 x 4	-	-	-
1	32	18	12	3,1	6	16	23	13	6,5	8,5	8,5	6,5	3,1	M3 x 4	M3 x 6	M3 x 4	8	0,8	2[1)]
2	35	20	12	2,25	6	17,5	25	16	7,5	10	10	7,5	3,1	M3 x 6	M3 x 6	M3 x 6	8	0,8	2[1)]
3	42	24	16	2	8	21	30	19	9	12	12	9	4,1	M4 x 6	M4 x 8	M4 x 6	10	1,2	3[1)]
4	46	26	16	2	8	23	33	22	10	13	14	10	4,1	M4 x 8	M4 x 8	M4 x 8	10	1,2	3[1)]
5	53	30	16	2,3	8	26,5	38	24	11	15	15	11	4,1	M4 x 8	M4 x 8	M4 x 8	10	1,2	3[1)]
6	56	32	16	2,8	10	28	40	28	12	17	17	12	4,1	M4 x 10	M4 x 8	M4 x 8	10	1,2	3
7	60	35	16	3,2	12	30	42,5	30	13	17,5	17,5	13	4,1	M4 x 10	M5 x 8	M4 x 8	12	1,5	4

[1)] Not according to DIN 6885.

Connecting Shafts at maedler.de

Linear Bearings KB-3-SSK ISO Series 3, Closed Design, Stainless Steel, with plastic cage

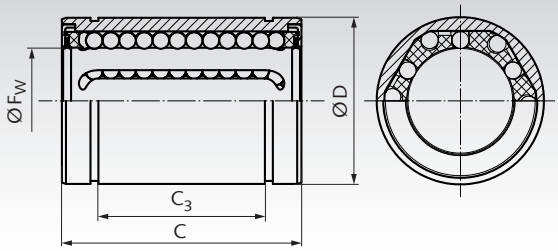

Material: Jacket and balls from stainless steel.
Ball cage made of plastic.

These linear bearings can be fitted inside a customer's housing or as spare parts for our closed units ISO Series 3.

All bearings must be lubricated before use. In order to prevent the ingress of dirt and the leakage of lubricant, the linear ball bearings are sealed on both sides.

Recommended shaft tolerance h6, housing tolerance H7.

Ordering Details: e.g.: Product No. 64600806SK, Linear Bearing KB-3-SSK, Internal-Ø 8 mm

Product No. with seals	F_w mm	D mm	C mm	C_3 mm	Load rating dyn. C N	Load rating stat. C_0 N	Gewicht g	Product No. Retaining Ring DIN 471 Page 726	Weight g
646 008 06SK	8	16	25	$14{,}3^{-0{,}2}$	260	400	20	**617 994 16**	0,7
646 012 06SK	12	22	32	$20{,}3^{-0{,}2}$	410	590	41	**617 994 22**	1,5
646 016 06SK	16	26	36	$22{,}3^{-0{,}2}$	770	1170	57	**617 994 26**	2,0
646 020 06SK	20	32	45	$28{,}3^{-0{,}2}$	860	1370	91	**617 994 32**	3,5
646 025 06SK	25	40	58	$40{,}4^{-0{,}3}$	980	1560	215	**617 994 40**	6,0
646 030 06SK	30	47	68	$48{,}4^{-0{,}3}$	1560	2740	260	**617 994 47**	7,5

Shaft steel, Shaft blocks and Precision housings
at www.maedler.de.

Linear Bearings KB-3-SSS ISO Series 3, Closed Design, Stainless Steel

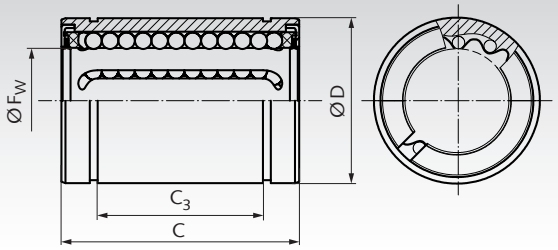

Material: Stainless steel (all components).

Stainless steel linear ball bearings, without seals. These linear bearings can be fitted inside a customer's housing or as spare parts for our closed units ISO Series 3.

All bearings must be lubricated before use.

Recommended shaft tolerance h6, housing tolerance H7.

Ordering Details: e.g.: Product No. 64600806SS, Linear Bearing KB-3-SSS, Internal-Ø 8 mm

Product No. without seals	F_w mm	D mm	C mm	C_3 mm	Load rating dyn. C N	Load rating stat. C_0 N	Weight g	Product No. Retaining Ring DIN 471 Page 726	Weight g
646 008 06SS	8	16	25	$14{,}3^{-0{,}2}$	260	400	20	**617 994 16**	0,7
646 012 06SS	12	22	32	$20{,}3^{-0{,}2}$	410	590	40	**617 994 22**	1,5
646 016 06SS	16	26	36	$22{,}3^{-0{,}2}$	770	1170	60	**617 994 26**	2,0
646 020 06SS	20	32	45	$28{,}3^{-0{,}2}$	860	1370	90	**617 994 32**	3,5
646 025 06SS	25	40	58	$40{,}4^{-0{,}3}$	980	1560	210	**617 994 40**	6,0
646 030 06SS	30	47	68	$48{,}4^{-0{,}3}$	1560	2740	320	**617 994 47**	7,5

Shaft steel, Shaft blocks and Precision housings
at www.maedler.de.

Linear Bearings KB-3-STS ISO Series 3, Closed Design

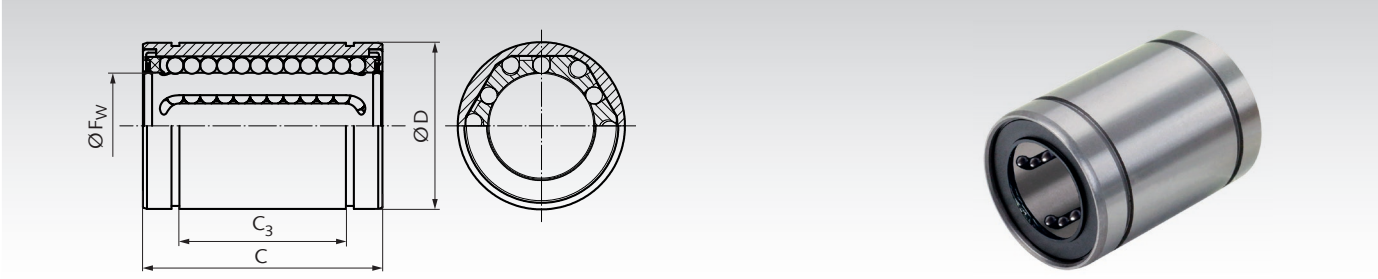

Material: With Steel jacket. Ball cage from steel.

These linear bearings can be fitted inside a customer's housing or as spare parts for our closed units ISO Series 3.

The bearings are greased at the factory. In order to prevent the ingress of dirt and the leakage of lubricant, the linear ball bearings are sealed on both sides.

Recommended shaft tolerance h6, housing tolerance H7.

Ordering Details: e.g.: Product No. 64600806S, Linear Bearing KB-3-STS, Internal-Ø 8 mm

Product No.	F_w mm	D mm	C mm	C_3 mm	Load rating dyn. C N	Load rating stat. C_0 N	Weight g	Product No. Retaining Ring DIN 471 Page 726	Weight g
646 008 06S	8	16	25	$14{,}3^{-0{,}2}$	350	410	20	**617 416 00**	0,7
646 010 06S*	10	19	29	$19{,}4^{-0{,}2*}$	370	540	30	**617 419 00**	1,0
646 012 06S	12	22	32	$20{,}3^{-0{,}2}$	555	800	40	**617 422 00**	1,5
646 016 06S	16	26	36	$22{,}3^{-0{,}2}$	1045	910	60	**617 426 00**	2,0
646 020 06S	20	32	45	$28{,}3^{-0{,}2}$	1170	1400	90	**617 432 00**	3,5
646 025 06S	25	40	58	$40{,}4^{-0{,}3}$	1330	1600	210	**617 440 00**	6,0
646 030 06S	30	47	68	$48{,}4^{-0{,}3}$	2120	2800	320	**617 447 00**	7,5
646 040 06S	40	62	80	$56{,}3^{-0{,}3}$	2920	4100	700	**617 462 00**	14,3

* ISO series 5.

Shaft steel, Shaft blocks and Precision housings at www.maedler.de.

Tandem Linear Bearings KBT-ST, Closed, Long Design

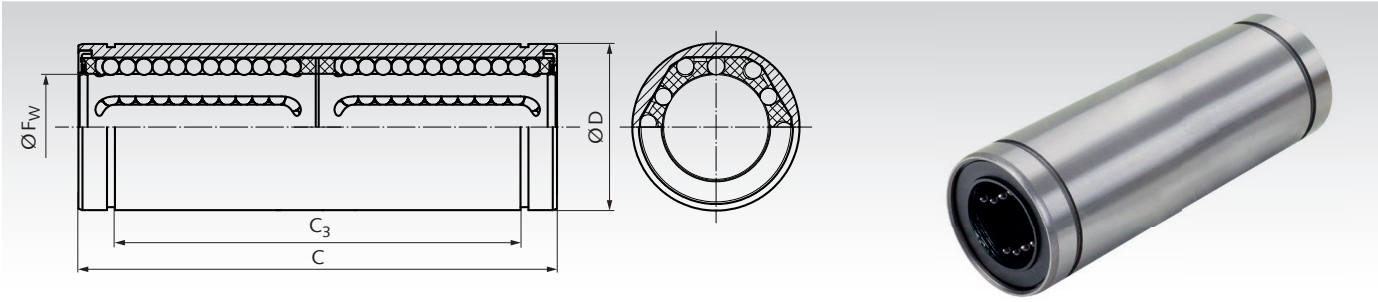

Material: With Steel jacket. Ball cage from plastic.

These linear bearings can be fitted inside a customer's housing. The bearings are greased at the factory. In order to prevent the ingress of dirt and the leakage of lubricant, the linear ball bearings are sealed on both sides.

Recommended shaft tolerance h6, housing tolerance H7.

Ordering Details: e.g.: Product No. 64600806T, Tandem Linear Bearing KBT-ST, Internal-Ø 8 mm

Product No.	F_w mm	D mm	C mm	C_3 mm	Load rating dyn. C N	Load rating stat. C_0 N	Weight g	Product No. Retaining Ring DIN 471 Page 726	Weight g
646 008 06T	8	16	46	30,8	421	804	40	**617 416 00**	0,7
646 012 06T	12	22	61	43,2	813	1570	80	**617 422 00**	1,5
646 016 06T	16	26	68	47,2	921	1780	115	**617 426 00**	2,0
646 020 06T	20	32	80	57,8	1370	2740	180	**617 432 00**	3,5
646 025 06T	25	40	112	78,3	1570	3140	430	**617 440 00**	6,0
646 030 06T	30	47	123	100,5	2500	5490	615	**617 447 00**	7,5
646 040 06T	40	62	151	116,9	3420	8040	1400	**617 462 00**	14,3
646 050 06T	50	75	192	149,9	6080	15900	2320	**617 475 00**	24,6
646 060 06T	60	90	209	163,7	7550	20000	3920	-	-

Shaft steel and Shaft blocks at www.maedler.de.

Tandem Linear Bearings KBT-ST-FM with central, round flange, Long Design

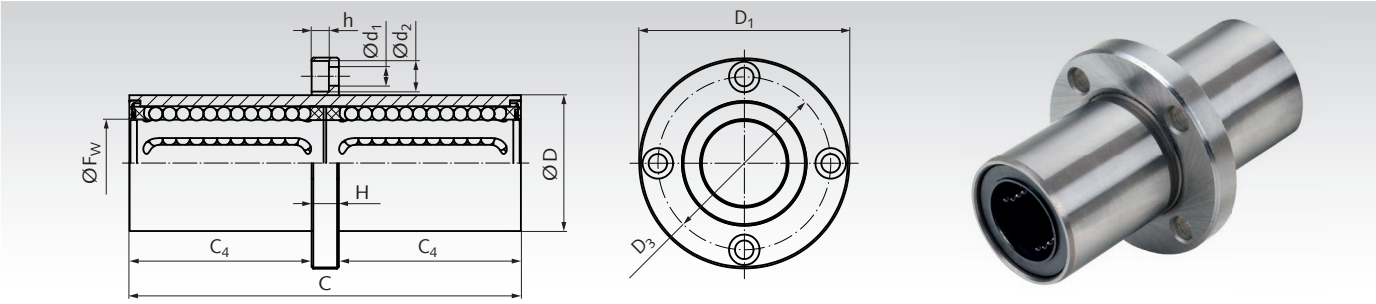

Material: With Steel jacket. Ball cage from plastic.

The linear ball bearings are suitable for screwing onto components. Via the four mounting holes, the linear bearings can be mounted directly e. g. in machines.This ensures easy mounting and interchangeability.

The bearings are greased at the factory. In order to prevent the ingress of dirt and the leakage of lubricant, the linear ball bearings are sealed on both sides.

Recommended shaft tolerance h6, housing tolerance H7.

Ordering Details: e.g.: Product No. 64600806FM, Tandem-Linear Bearing KBT-ST-FM, Internal-Ø 8 mm

Product No.	F_w mm	D mm	D_1 mm	D_3 mm	$C^{\pm 0,3}$ mm	C_4 mm	H mm	d_1 x d_2 x h mm	Load rating dyn. C N	Load rating stat. C_0 N	Weight g
646 008 06FM	8	16	32	24	46	20,5	5	3,5 x 6 x 3,1	421	804	60
646 012 06FM	12	22	42	32	61	27,5	6	4,5 x 7,5 x 4,1	813	1570	110
646 016 06FM	16	26	46	36	68	31	6	4,5 x 7,5 x 4,1	921	1780	160
646 020 06FM	20	32	54	43	80	36	8	5,5 x 9 x 5,1	1370	2740	260
646 025 06FM	25	40	62	51	112	52	8	5,5 x 9 x 5,1	1570	3140	540
646 030 06FM	30	47	76	62	123	56,5	10	6,6 x 11 x 6,1	2500	5490	820
646 040 06FM	40	62	98	80	151	69	13	9 x 14 x 8,1	3430	8040	1810
646 050 06FM	50	75	112	94	192	89,5	13	9 x 14 x 8,1	6080	15900	2820
646 060 06FM	60	90	134	112	209	95,5	18	11 x 17 x 11,1	7550	20000	4920

Tandem Linear Bearings KBT-ST-VM with central Square flange, Long Design

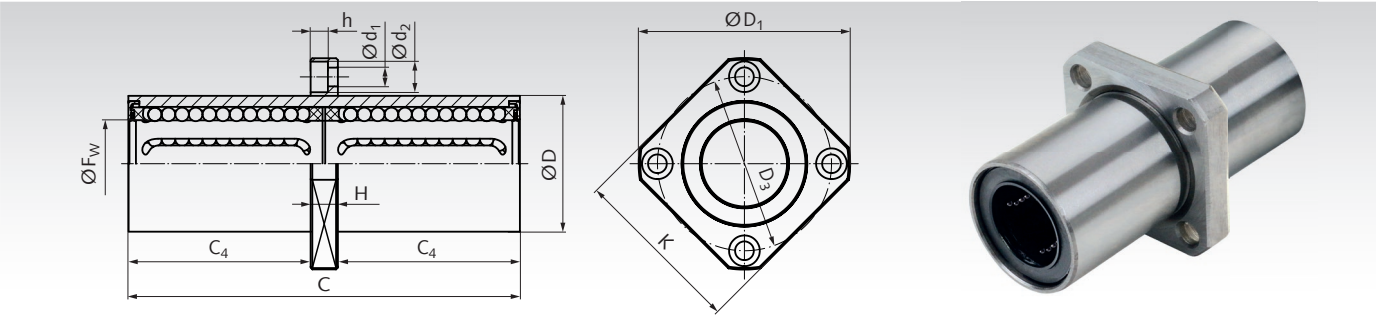

Material: With Steel jacket. Ball cage from plastic.

The linear ball bearings are suitable for screwing onto components. Via the four mounting holes, the linear bearings can be mounted directly e. g. in machines.This ensures easy mounting and interchangeability.

The bearings are greased at the factory. In order to prevent the ingress of dirt and the leakage of lubricant, the linear ball bearings are sealed on both sides.

Recommended shaft tolerance h6, housing tolerance H7.

Ordering Details: e.g.: Product No. 64600806VM, Tandem-Linear Bearing KBT-ST-VM, Internal-Ø 8 mm

Product No.	F_w mm	D mm	D_1 mm	D_3 mm	$C^{\pm 0,3}$ mm	C_4 mm	H mm	d_1 x d_2 x h mm	K mm	Load rating dyn. C N	Load rating stat. C_0 N	Weight g
646 008 06VM	8	16	32	24	46	20,5	5	3,5 x 6 x 3,1	25	421	804	60
646 012 06VM	12	22	42	32	61	27,5	6	4,5 x 7,5 x 4,1	32	813	1570	110
646 016 06VM	16	26	46	36	68	31	6	4,5 x 7,5 x 4,1	35	921	1780	160
646 020 06VM	20	32	54	43	80	36	8	5,5 x 9 x 5,1	42	1370	2740	260
646 025 06VM	25	40	62	51	112	52	8	5,5 x 9 x 5,1	50	1570	3140	540
646 030 06VM	30	47	76	62	123	56,5	10	6,6 x 11 x 6,1	60	2500	5490	820
646 040 06VM	40	62	98	80	151	69	13	9 x 14 x 8,1	75	3430	8040	1810
646 050 06VM	50	75	112	94	192	89,5	13	9 x 14 x 8,1	88	6080	15900	2820
646 060 06VM	60	90	134	112	209	95,5	18	11 x 17 x 11,1	106	7550	20000	4920

Linear Bearings Units KG-3-K ISO Series 3, Easy-Line, Short Version, Closed Design

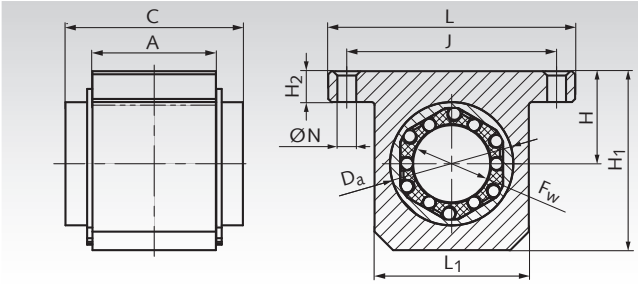

Material: Housing made from extruded aluminium with a closed linear bearing of the ISO Series 3 from reliable brand in good quality. Our Easy-Line bushes with swimming seals are very light running. Self-aligning capability that accommodates tilting. With wiping seals.

All bearings are lubricated ready-to-install.

Recommended shaft tolerance h6.

Spare linear bearing catalogue 43 page 554.

Ordering Details: e.g.: Product No. 64671204E, Linear Bearings Unit KG-3-K, Easy-Line, Short Version, Internal Ø 12 mm

Product No. Closed	F_w mm	A mm	C mm	D_a mm	$H^{\pm 0,015}$ mm	H_1 mm	H_2 mm	J mm	L mm	L_1 mm	N mm	Load Rating dyn. C N	Load Rating stat. C_0 N	Weight g
646 712 04E	12	20	32	22	18	35	6	42	52	30	5,3	1020	1290	90
646 716 04E	16	22	36	26	22	40,5	7	46	56	34	5,3	1250	1550	120
646 720 04E	20	28	45	32	25	48	8	58	70	40	6,4	2090	2630	250
646 725 04E	25	40	58	40	30	58	10	68	80	50	6,4	3780	4720	490
646 730 04E	30	48	68	47	35	67	10	76	88	58	6,4	5470	6810	780
646 740 04E	40	56	80	62	45	85	12	94	108	74	8,4	6590	8230	1280
646 750 04E	50	72	100	75	50	100	12	116	135	96	10,5	10800	13500	1700

Shaft steel and Shaft blocks at www.maedler.de.

Linear Bearings Units KG-3-KO ISO Series 3, Easy-Line, Short Version, Open Design

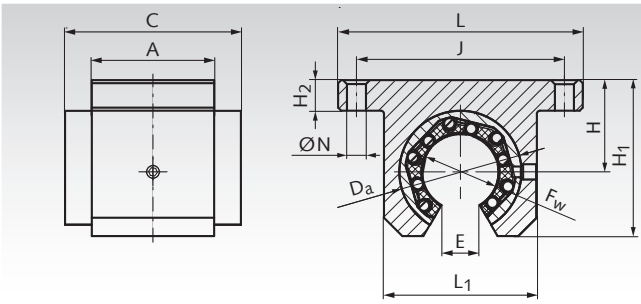

Material: Housing made from extruded aluminium with an open linear bearing of the ISO Series 3 from reliable brand in good quality. Our Easy-Line bushes with swimming seals are very light running. Self-aligning capability that accommodates tilting. With wiping seals.

All bearings are lubricated ready-to-install.

Recommended shaft tolerance h6.

Spare linear bearing catalogue 43 page 554.

Ordering Details: e.g.: Product No. 64671205E, Linear Bearings Unit KG-3-KO, Easy-Line, Short Version, Internal Ø 12 mm

Product No. Open	F_w mm	A mm	C mm	D_a mm	$H^{\pm 0,015}$ mm	H_1 mm	H_2 mm	J mm	L mm	L_1 mm	E mm	N mm	Load Rating dyn. C N	Load Rating stat. C_0 N	Weight g
646 712 05E	12	20	32	22	18	28	6	42	52	30	7	5,3	1020	1290	90
646 716 05E	16	22	36	26	22	33,5	7	46	56	34	9,8	5,3	1250	1550	120
646 720 05E	20	28	45	32	25	42	8	58	70	40	10,5	6,4	2090	2630	250
646 725 05E	25	40	58	40	30	51	10	68	80	50	13	6,4	3780	4720	490
646 730 05E	30	48	68	47	35	60	10	76	88	58	15,3	6,4	5470	6810	780
646 740 05E	40	56	80	62	45	77	12	94	108	74	21,4	8,4	6590	8230	1280
646 750 05E	50	72	100	75	50	93	12	116	135	96	24	10,5	10800	13500	1700

Shaft steel with shaft support at www.maedler.de.

Linear Bearings Units KG-3-FTST ISO Series 3, Tandem-Flange Version, with Linear Bearings of Closed Design

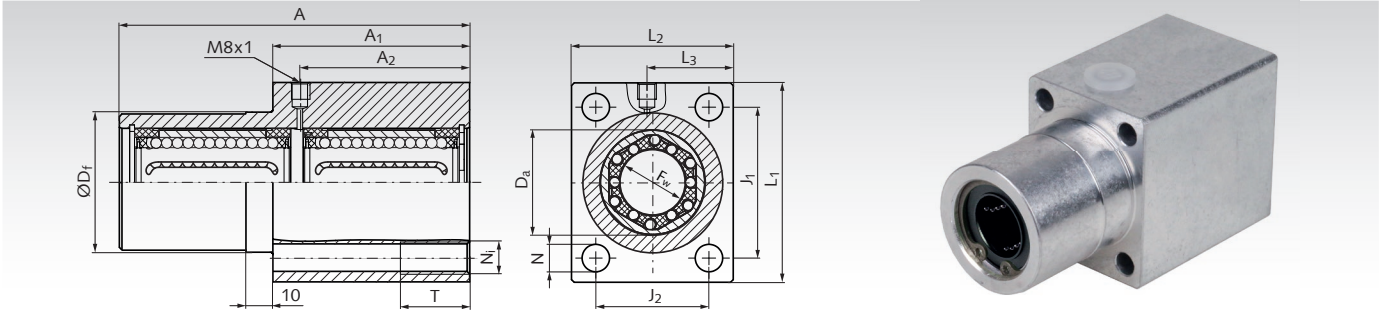

Material: Housing made from extruded aluminium with two closed linear bearings of the ISO Series 3 with steel jacket and plastic cage. All bearings are sealed on both sides and lubricated ready for installation.

Recommended shaft tolerance h6.

Spare linear bearing catalogue 43 page 557.

Ordering Details: e.g.: Product No. 646 712 07S, Linear Bearings Unit KG-3-FTST, Tandem-Flange Version, Internal Ø 12 mm

Product No.	F_w mm	A mm	A_1 mm	A_2 mm	D_a mm	D_f g7 mm	J_1 mm	J_2 mm	L_1 mm	L_2 mm	L_3 mm	N mm	N_i mm	T mm	Load Rating dyn. C N	stat. C_0 N	Weight g
646 712 07S	12	76	46	36	22	30	32	24	42	34	19	5,3	M6	13	905	1304	200
646 716 07S	16	84	50	40	26	35	38	28	50	40	22	6,6	M8	18	1703	1483	320
646 720 07S	20	104	60	50	32	42	45	35	60	50	27	8,4	M10	22	1907	2282	550
646 725 07S	25	130	73	63	40	52	56	42	74	60	32	10,5	M12	26	2168	2608	1170
646 730 07S	30	152	82	74	47	61	64	50	84	70	37	13,5	M16	34	3456	4564	1500

Shaft steel and Shaft blocks at www.maedler.de.

Linear Motion Guide DA 0118 RC with Ball Carriage, Track Width 50 mm

Material: Track made from aluminium.
Carriage: Aluminium housing with plastic sealings.
On choice: With stainless steel balls (greased) or polymer balls (grease free).

Linear guide for universal use.

- Four track lenghts on choice (for to cut by the customer).
- Tracks without boreholes, or with mounting holes.
- Several carriages can be used on one track.
- Resistant against corrosion and dirt.
- All parts have to be ordered seperately.
- Long service life, tested to 100,000 meters of travel distance.
- Temperature range: -20°C to +70°C.

Ordering details: e.g.: 1x Prod. No. 64980501, Carriage with stainless steel balls,
1x Prod. No. 64980506, Track 600mm,
1x Prod. No. 64980503, Pair of End Stops

Mounting holes only at
Product No. 649 805 06H,
Product No. 649 805 12H,
Product No. 649 805 18H,
Product No. 649 805 24H

1) Bores for endstop at length 2400mm on both ends. At other lengths only on one side.

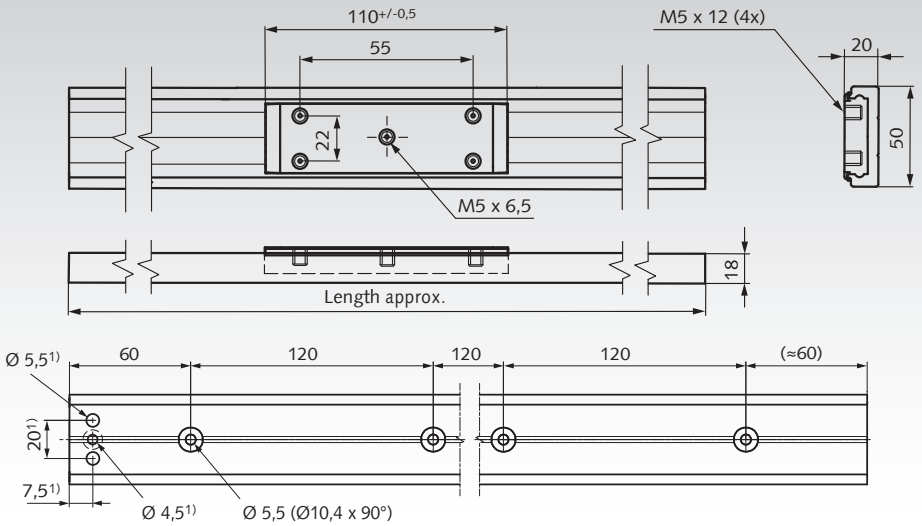

Product No.	Product	Load ratings in kg depending on mounting position and number of carriages: vertically mounted 1 Carriage	vertically mounted 2 Carri.	vertically mounted 3 Carri.	horizontally monted, lying 1 Carriage	horizontally monted, lying 2 Carri.	horizontally monted, lying 3 Carri.	horizontally monted, hanging** 1 Carriage	horizontally monted, hanging** 2 Carri.	horizontally monted, hanging** 3 Carri.	Weight g
649 805 01	Carriage with stainless steel balls	150	300	375	90	180	206	90	180	206	190
649 805 02	Carriage with polymer balls	90	180	225	54	108	124	54	108	124	150
649 805 06	Track, length 600mm										485
649 805 06H	Track, length 600mm with holes										480
649 805 12	Track, length 1200mm										965
649 805 12H	Track, length 1200mm with holes										960
649 805 18	Track, length 1800mm										1450
649 805 18H	Track, length 1800mm with holes										1440
649 805 24	Track, length 2400mm										1930
649 805 24H	Track, length 2400mm with holes										1920
649 805 03*	Pair of End Stops*										20

* One pair, with two screws. Each end stop has a central, threaded hole for one screw, to be mounted from the bottom of the rail. In each end stop are two additional through holes, for optional mounting through the rail and the customer´s ground plate.
** For rail lengths from 1200mm and carriage spacing min. 400mm.

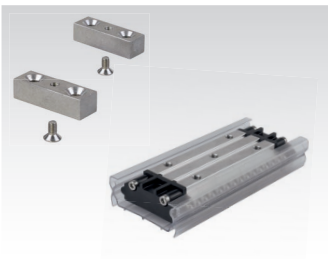

Carriage (with mounting aid) and End Stops have to be ordered seperately.

Tracks on choice without bores or with mounting holes.

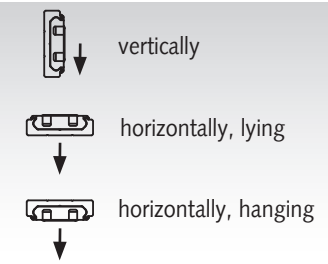

The load ratings depend on the mounting position (see table).

Note

Not recommended for high torque applicatins.
Fix track on a rigid and levelm surface. Fixing recommendation: M5 countersunk screw or 5mm countersunk wood screw.

Push the carriages with the mounting aid carefully onto the track. Distribute weight evenly across carriages. Infinte track lengths possible. The ends must be reworked fine. Butt tracks end to end and align the centre lines. Reworking on request.

Linear Motion Guides LA 1815 for light loads

Material:
Track: Aluminium.
Plate: Steel, zinc-plated.
Rollers: Steel
Stop: Plastic.

Universally applicable linear motion guide for light applications.

- Precise linear motion over the entire travel.
- Load capacity up to 8.2 kg, static, up to 3.1 kg, dynamic.
- The load ratings depend on the mounting position.
- Carriage mounted on rollers.
- Temperature range: -20°C to +70°C.

Accuride

Ordering details: e.g.: Prod. No. 64981520, Linear motion guide LA 1815

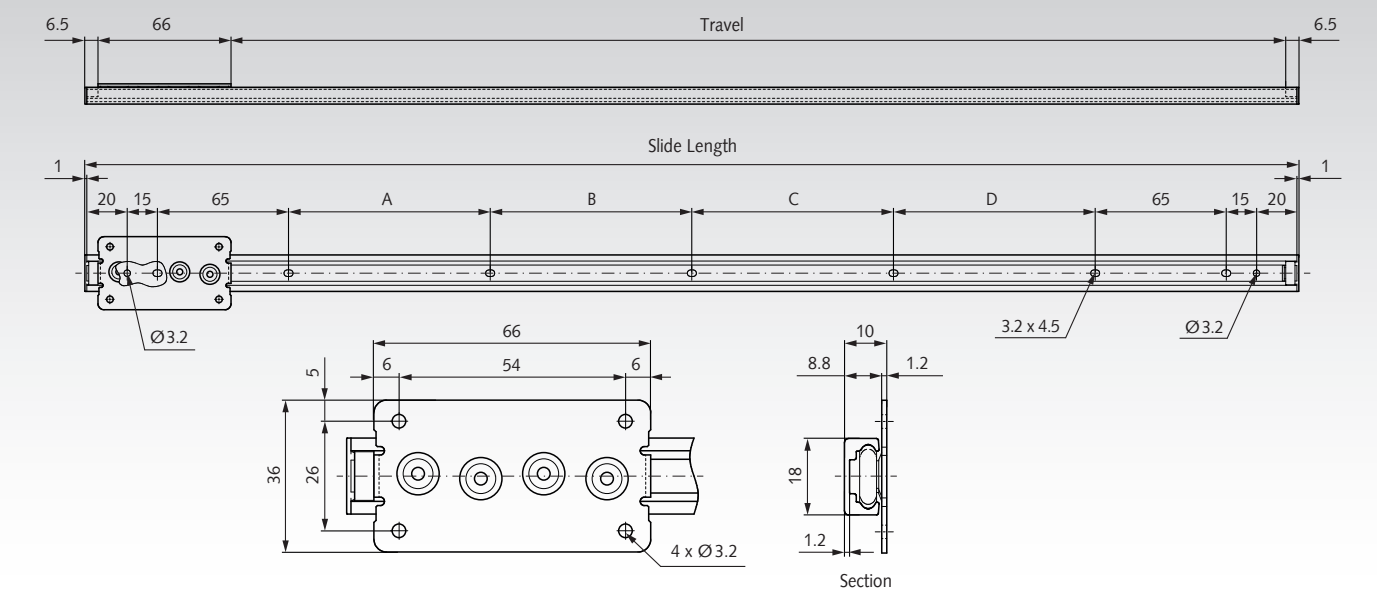

Product No.	Type	Slide Length mm	Driving distance mm	A mm	B mm	C mm	D mm	Load Rating horizontally* kg	Load Rating vertically* kg	Weight per unit g
649 815 20	LA1815-0020	202	123	-	-	-	-	1	3,1	63
649 815 25	LA1815-0025	252	173	50	-	-	-	1	3,1	71
649 815 30	LA1815-0030	302	223	100	-	-	-	1	3,1	79
649 815 35	LA1815-0035	352	273	75	75	-	-	1	3,1	87
649 815 40	LA1815-0040	402	323	100	100	-	-	1	3,1	94
649 815 45	LA1815-0045	452	373	100	50	100	-	1	3,1	102
649 815 50	LA1815-0050	502	423	100	100	100	-	1	3,1	110
649 815 55	LA1815-0055	552	473	100	75	75	100	1	3,1	118
649 815 60	LA1815-0060	602	523	100	100	100	100	1	3,1	125

* Load value for dynamic loading conditions.

Note

Not recommended for high torque applications.
Fix track on a rigid and level surface.

Recommended mount: M3 screw.
Max. head height 2mm.

Can also be used vertically if no lateral forces act on the guide.

Load ratings

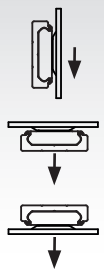

Load direction	Load ratings static kg	Load ratings dynamic kg
vertically	8,2	3,1
horizontally, lying	5,1	1,0
horizontally, hanging	5,1	1,0

Slides DS 2330 DL, Width 19.5 mm, to 15 kg, Stainless Steel, Full Extension

Material: Stainless steel 1.4301 (AISI 304).

Lightweight, compact high-temperature rail for refrigerators, ovens and industrial high-temperature applications.

- All materials are suitable for contact with food.
- Resistant to cleaning with water.
- Dry lubrication through integrated graphite elements.
- Ideal for very harsh environments where structural steel could corrode and classic grease lubrication is not possible.
- When mounted horizontally, the load value is reduced by 75%.
- Service life 10,000 cycles.
- Temperature range: -80°C to +500°C.

Ordering details: e.g.: Prod. No. 64906615, Slides DS 2330 DL

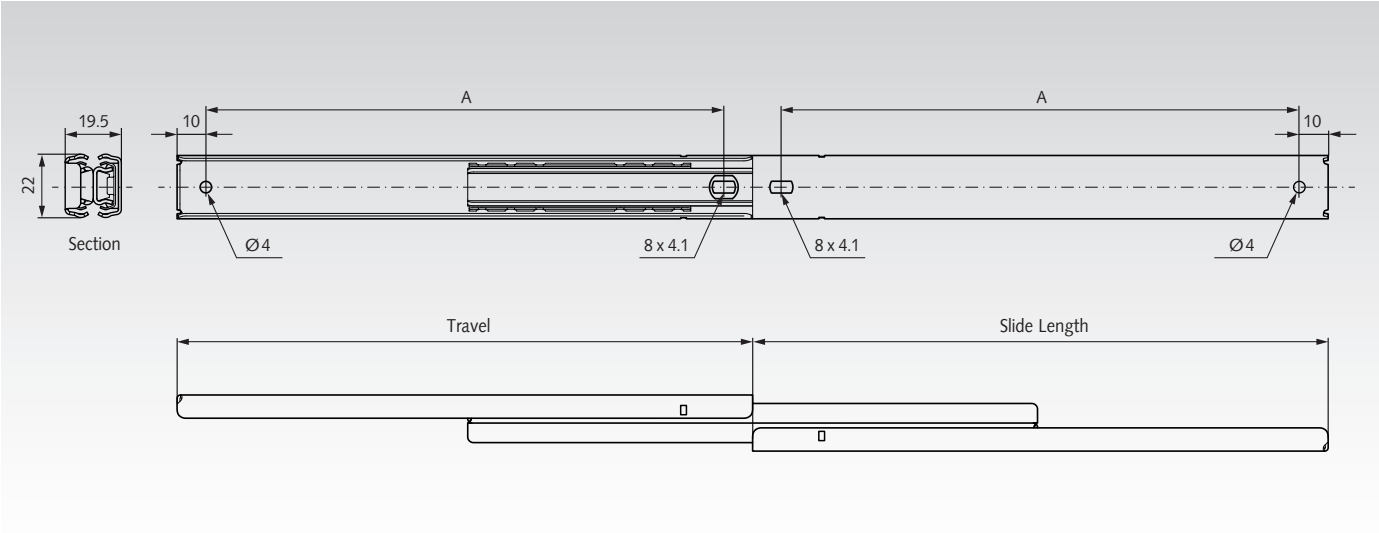

Product No. per Pair	Type	Slide Length mm	Travel +/-3,2 mm	A mm	Load Rating per Pair kg	Weight per Pair kg
649 066 15	DS2330-0015DL	150	150	130	9	0,316
649 066 20	DS2330-0020DL	200	210	180	11	0,420
649 066 25	DS2330-0025DL	250	250	230	12	0,535
649 066 30	DS2330-0030DL	300	310	280	14	0,640
649 066 35	DS2330-0035DL	350	350	330	15	0,750
649 066 40	DS2330-0040DL	400	410	380	15	0,854

Note

Recommended mount: M4 screw.
Max. head height 3 mm.
Max. head diameter 8 mm.

During installation, the centre rail must be positioned so that the access hole matches the screw position.

Load ratings quoted are the maximum for a pair of side mounted slides installed 450 mm apart, unless otherwise stated.

Slides DZ 3832 EC-D, width 12.7 mm, up to 45 kg, Full Extension

Material:
Slide elements: Cold rolled steel, bright zinc-plated.
Ball retainers: Plastic / zinc-plated steel.
Balls: Hardened steel.

Telescopic precision ball bearing slides for applications in the industrial and electronics sector.
- Self Close.
- Fast Disconnect.
- Hold-in in the closed position.
- Setting cams for drawer (3.2 mm).
- Service life 80,000 cycles.
- Temperature range: +10°C to +40°C. Storage: -20°C to +80°C.

Accuride

Ordering Details: e.g.: Product No. 64902535, Slides DZ 3832 EC-D

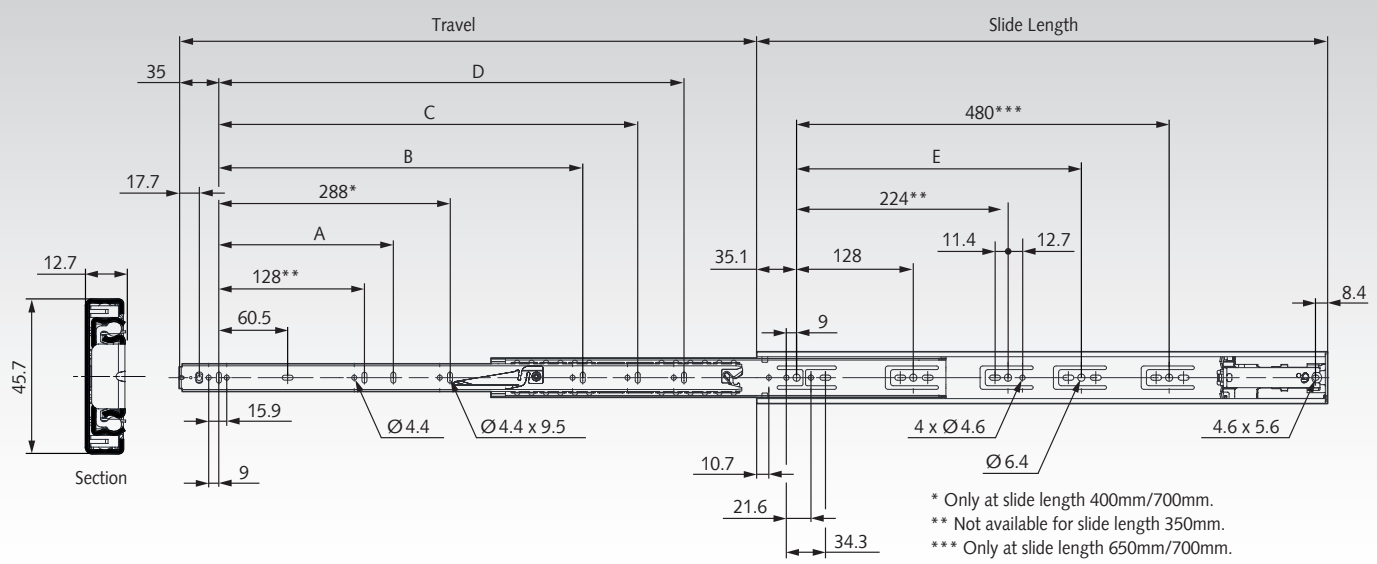

Product No. per Pair	Slide Length mm	Travel +/-3.2 mm	A mm	B mm	C mm	D mm	E mm	Load Rating per Pair kg	Weight per Pair kg
649 025 35	350	310	224	-	-	259	-	43	1,01
649 025 40	400	406	-	-	-	-	-	44	1,18
649 025 45	450	457	-	320	-	-	-	45	1,34
649 025 50	500	508	-	320	-	409	320	45	1,51
649 025 55	550	559	-	320	416	-	352	45	1,66
649 025 60	600	610	224	416	-	509	352	45	1,83
649 025 65	650	660	224	416	544	-	352	44	1,97
649 025 70	700	711	224	416	544	609	352	43	2,13

Note

Recommended fastening: M4 screw/4mm wood screw/6mm Euro-screw. Max. head height 2,5mm/Ø9,6mm.
Drawer width should not exceed slide length.
Use all mounting positions to achieve the max. load rating.
Horizontal mounting is not recommended.

Selection Tool
on the Internet at **www.maedler.de**
in the section **MÄDLER®-Tools**

Slides DS 5321 EC, Width 19.1 mm, to 100 kg, Stainless Steel, Full Extension

Material: Stainless steel 1.4301 (AISI 304).

Telescopic ball bearing slides for applications in the industrial and electronics sector.
- Self Close on the last 45mm of travel.
- Suitable for drawers up to 1000mm wide at high load.
- Service life 80,000 cycles.
- Temperature range: +0°C to +40°C. Storage: -20°C to +80°C.

Opening force 25N +/-5N.

Ordering details: e.g.: Prod. No. 64904140, Slides DS 5321 EC

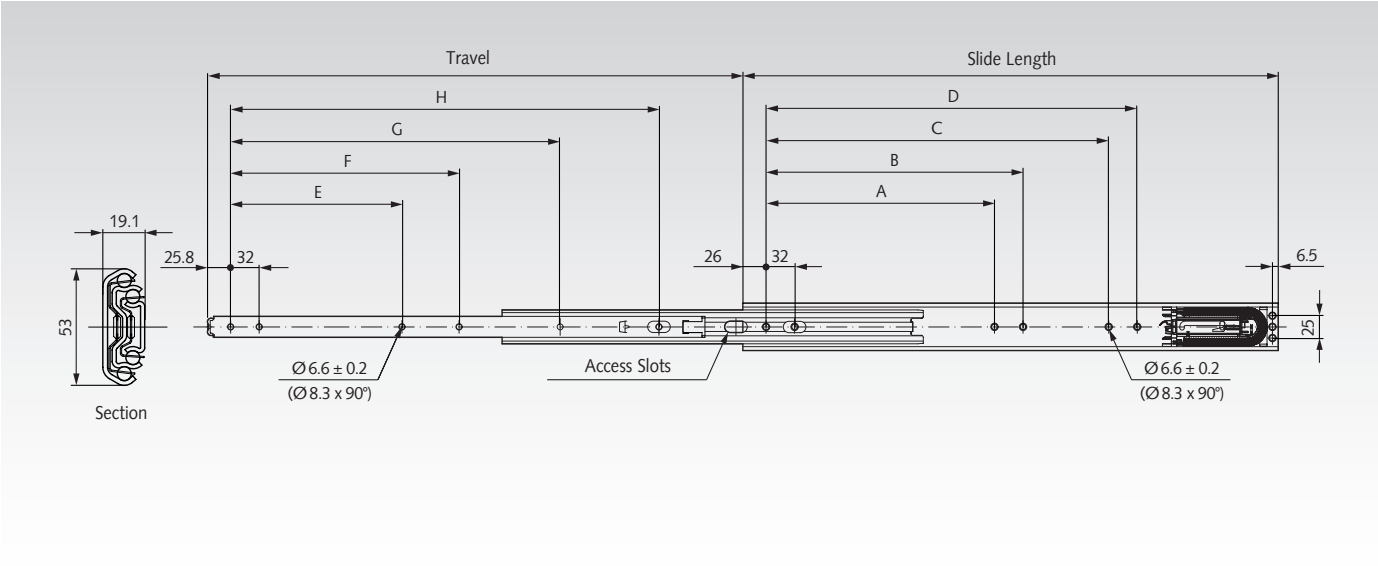

Product No. per Pair	Slide Length mm	Travel ±3 mm	A mm	B mm	C mm	D mm	E mm	F mm	G mm	H mm	Load Rating[1] per Pair kg	Weight per Pair kg
649 041 40	400	388	160	192	-	-	128	160	-	288	65 / 55	1,99
649 041 45	450	450	160	192	256	-	128	160	-	320	65 / 55	2,27
649 041 50	500	500	192	224	-	-	160	192	-	384	70 / 60	2,57
649 041 55	550	550	192	224	320	352	160	192	-	416	85 / 72	2,87
649 041 60	600	600	256	288	384	416	192	256	-	480	100 / 85	3,18
649 041 70	700	700	288	320	448	480	256	288	512	576	100 / 85	3,79
649 041 80	790	800	352	384	544	576	320	352	416	672	90 / 75	4,42

[1] Drawer width 450mm / 1000mm.

Note

Recommended mount: M5 countersunk / 6mm countersunk euro screw.
Use all mounting positions to achieve the max. load rating.
Optional clip-on brackets for bottom or platform mounting on request.
Attention: Vertical mounting only.

Selection Tool
on the Internet at **www.maedler.de**
in the section **MÄDLER®-Tools**

Slides DS 5334 EC, Width 19.1 mm, to 90 kg, Over Extension

Material: Stainless steel 1.4301 (AISI 304).

STAINLESS

Telescopic ball bearing slides for applications in the industrial and electronics sector.
- Fast disconnection.
- Self Close on the last 45mm of travel.
- Suitable for drawers up to 1000mm wide at high load.
- Service life 80,000 cycles.
- Temperature range: +0°C to +40°C. Storage: -20°C to +80°C.

Opening force 25N +/-5N.

Ordering details: e.g.: Prod. No. 64904740, Slides DS 5334 EC

Accuride

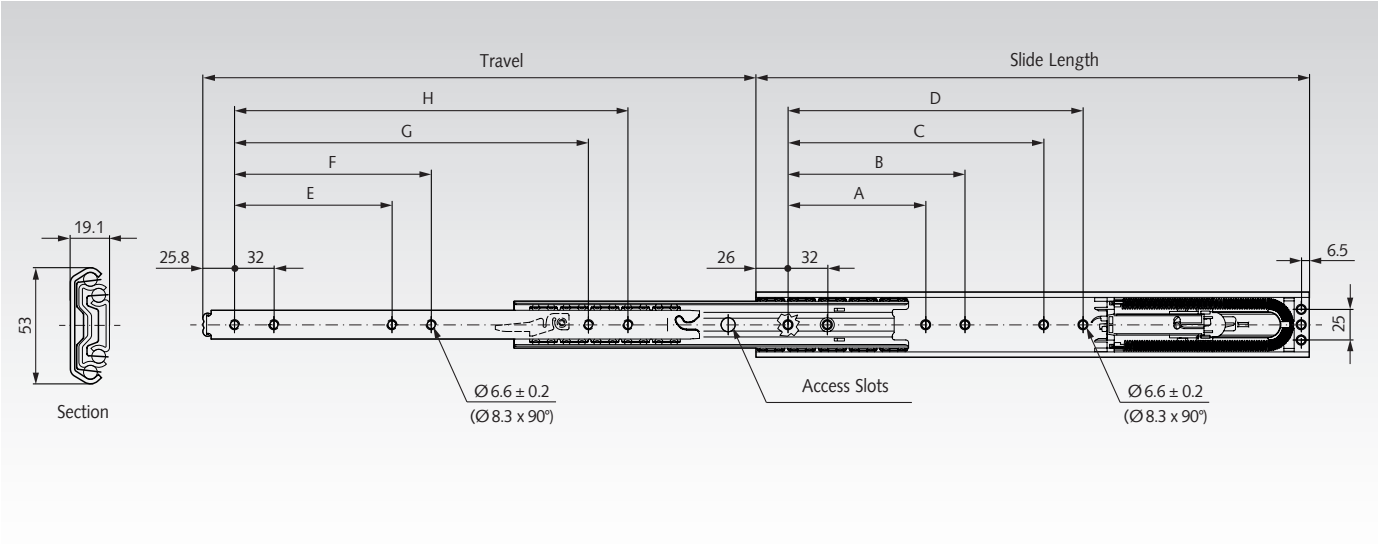

Product No. per Pair	Slide Length mm	Travel ±3 mm	A mm	B mm	C mm	D mm	E mm	F mm	G mm	H mm	Load Rating[1] per Pair kg	Weight per Pair kg
649 047 40	400	388	160	192	-	-	128	160	-	288	65 / 55	1,99
649 047 45	450	450	160	192	256	-	128	160	-	320	65 / 55	2,27
649 047 50	500	500	192	224	-	-	160	192	-	384	70 / 60	2,57
649 047 55	550	550	192	224	320	352	160	192	-	416	85 / 72	2,87
649 047 60	600	600	256	288	384	416	192	256	-	480	90 / 80	3,18
649 047 70	700	700	288	320	448	480	256	288	512	576	90 / 80	3,79
649 047 79	790	800	352	384	544	576	320	352	416	672	90 / 75	4,42

[1] Drawer width 450mm / 1000mm.

Note

Recommended mount: M5 countersunk / 6mm countersunk Euro screw.
Use all mounting positions to achieve the max. load rating.
Attention: Vertical (side) mounting only.
The load capacity was tested at a slide spacing of 450mm.
When reconnecting the slide, insert the inner members with the intermediate members in retracted position. Apply the required force in a steady manner.

Selection Tool
on the Internet at **www.maedler.de**
in the section **MÄDLER®-Tools**

Compact Linear Axes GKS 2040

Material: Steel.

The GKS 2040 compact linear axis is a compact, flexible positioning module with a steel profile. The carriage is moved by a recirculating ball screw drive, mounted at the drive flange. Due to the recirculating ball bearing guide of the carriage and the integrated ball screw nut, the linear axis achieves very high nominal loads and high rigidity with minimal friction and idle torque.

Stroke: 30mm to 130mm.
Rail length L: 100mm to 200mm.
Repeatability: ±5µm.
Positioning accuracy: 60µm.
Permitted speed: max. 100mm/s.*
Temperature range: +0°C to +70°C.

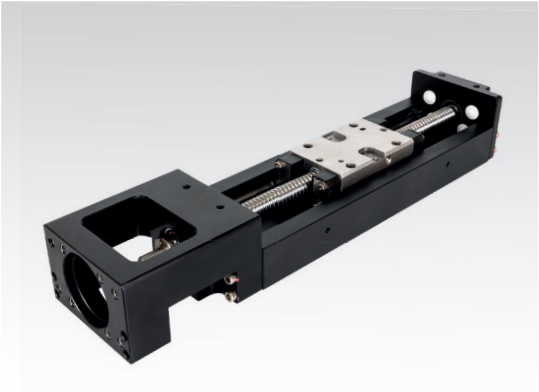

Order details: e.g: Article no. GKS2040-30-12N-P2, Compact Linear Axis GKS 2040

Compact linear axis without protective cover:

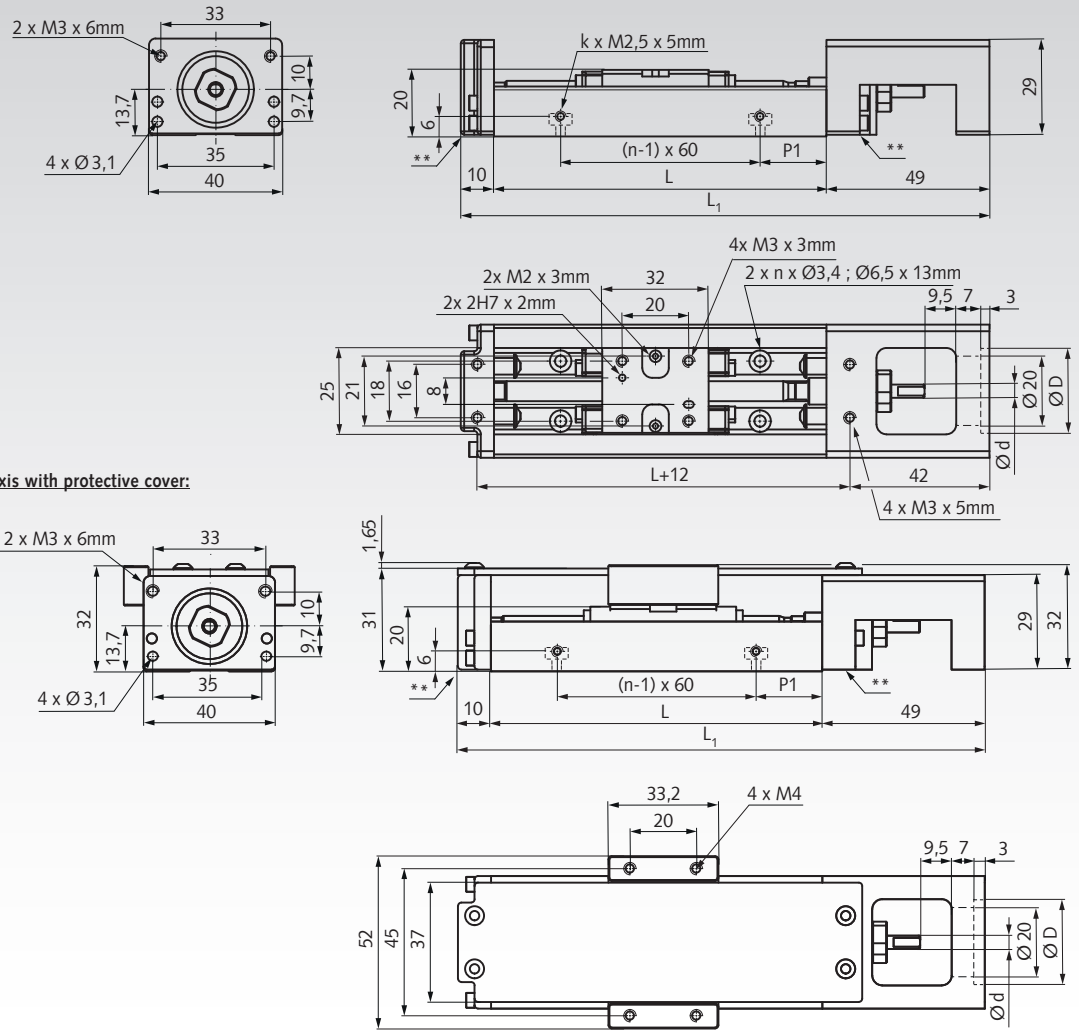

Construction Dimensions

Product No.	Lead mm	Stroke mm	$D^{+0,01/+0,03}$ mm	d^{h7} mm	L mm	L_1 mm	n Pcs.	k Pcs.	P_1 mm	Weight kg
GKS2040-30-12N-P2	2	30	23	4	100	159	2	2	20	0,5
GKS2040-80-12N-P2	2	80	23	4	150	209	3	3	15	0,6
GKS2040-130-12N-P2	2	130	23	4	200	259	3	3	40	0,8

Note:

Other versions in steel and aluminium as well as axes with higher accuracy class and motor on request.

*The permissible speed depends on the motor type (stepper motor max. 40 mm/s or servo motor max. 100 mm/s).
** The marked attachment parts are 0.5 mm higher than the contact surface of the axis (dimension L).

Compact Linear Axes GKS 2650

Material: Steel.

The GKS 2650 compact linear axis is a compact, flexible positioning module with a steel profile. The carriage is moved by a recirculating ball screw drive, mounted at the drive flange. Due to the recirculating ball bearing guide of the carriage and the integrated ball screw nut, the linear axis achieves very high nominal loads and high rigidity with minimal friction and idle torque.

Stroke: 60mm to 210mm.
Rail length L: 150mm to 300mm.
Repeatability: ±5µm.
Positioning accuracy: 60µm.
Permitted speed: max. 100mm/s.*
Temperature range: +0°C to +70°C.

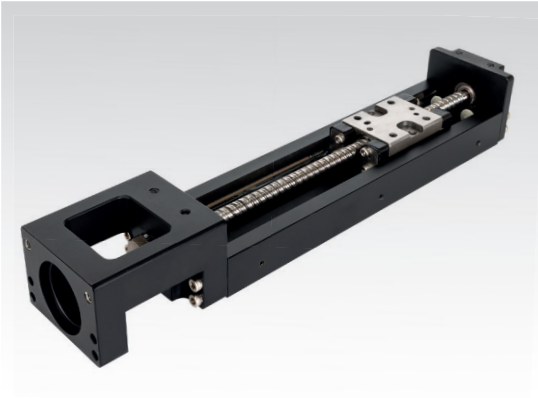

Order details: e.g: Article no. GKS2650-60-12N-P2, Compact Linear Axis GKS 2650

Compact linear axis without protective cover:

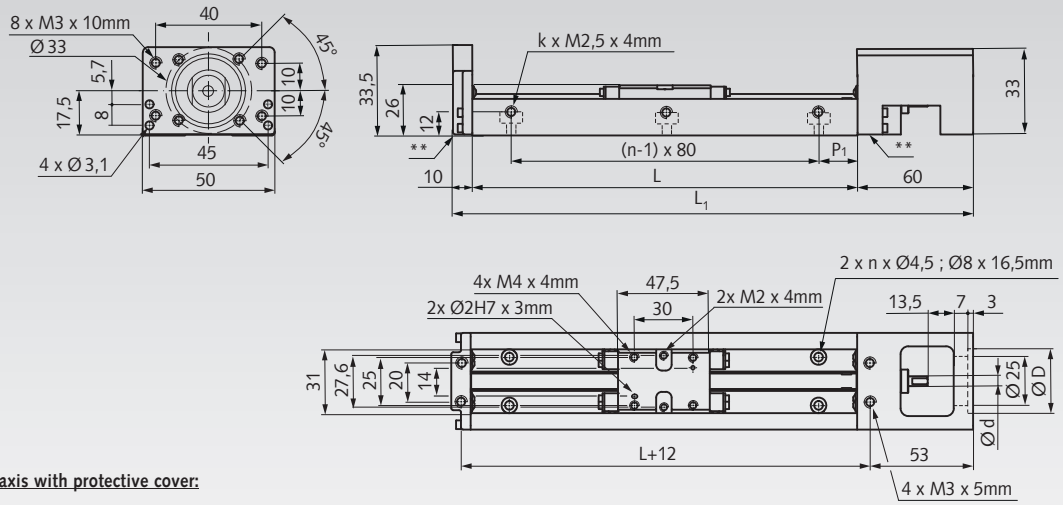

Compact linear axis with protective cover:

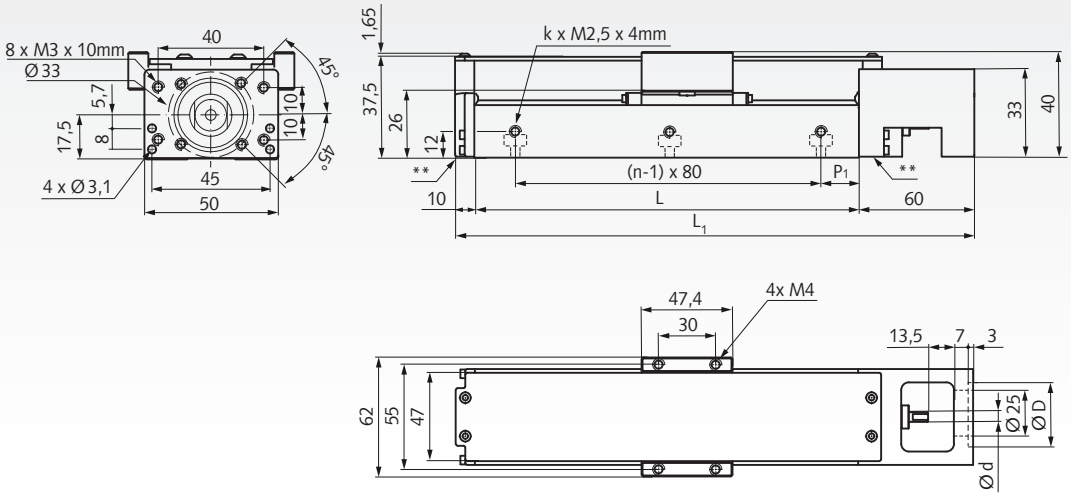

Construction Dimensions

Product No.	Lead mm	Stroke mm	$D^{+0,02/+0,05}$ mm	d^{h7} mm	L mm	L_1 mm	n Pcs.	k Pcs.	P_1 mm	Weight kg
GKS2650-60-12N-P2	2	60	28	5	150	220	2	2	35	1,2
GKS2650-110-12N-P2	2	110	28	5	200	270	3	3	20	1,4
GKS2650-160-12N-P2	2	160	28	5	250	320	3	3	45	1,6
GKS2650-210-12N-P2	2	210	28	5	300	370	4	4	30	1,8

Note:

Other versions in steel and aluminium as well as axes with higher accuracy class and motor on request.

*The permissible speed depends on the motor type (stepper motor max. 40 mm/s or servo motor max. 100 mm/s).
** The marked attachment parts are 0.5 mm higher than the contact surface of the axis (dimension L).

Compact Linear Axes GKS 3060

Material: Steel.

The GKS 3060 compact linear axis is a compact, flexible positioning module with a steel profile. The carriage is moved by a recirculating ball screw drive, mounted at the drive flange. Due to the recirculating ball bearing guide of the carriage and the integrated ball screw nut, the linear axis achieves very high nominal loads and high rigidity with minimal friction and idle torque.

Stroke: 50mm to 500mm.
Rail length L: 150mm to 600mm.
Repeatability: ±5µm.
Positioning accuracy: 60µm to 100µm.
Permitted speed: max. 250mm/s.*
Temperature range: +0°C to +70°C.

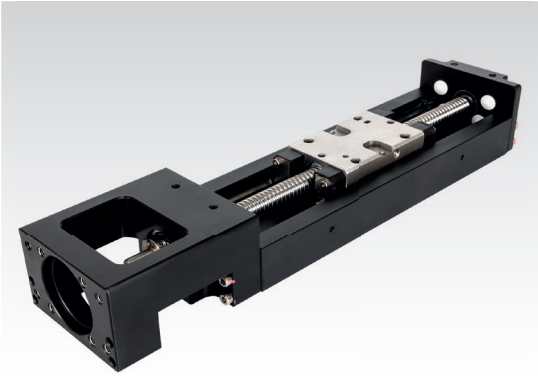

Order details: e.g: Article no. GKS3060-50-12N-P5, Compact Linear Axis GKS 3060

Compact linear axis without protective cover:

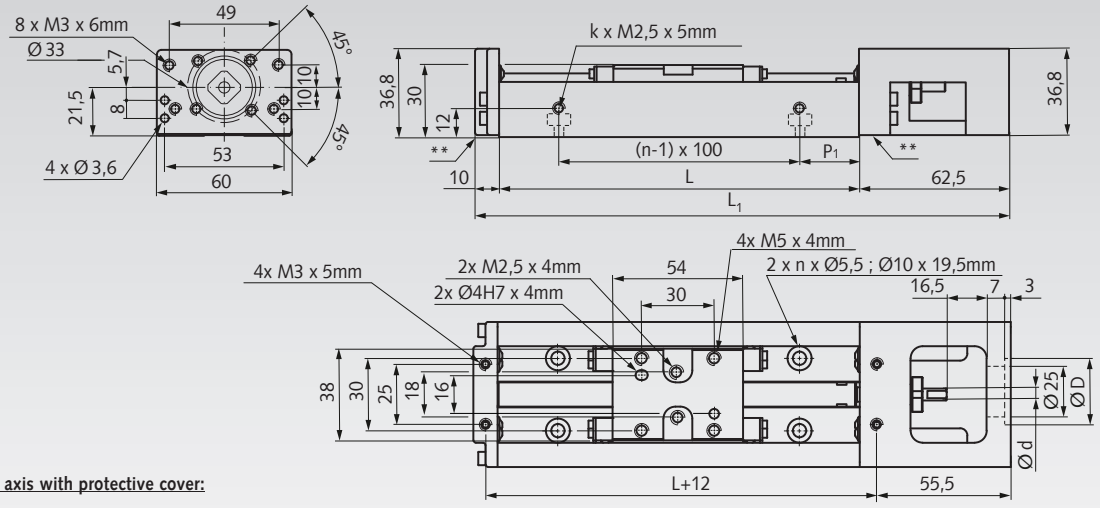

Compact linear axis with protective cover:

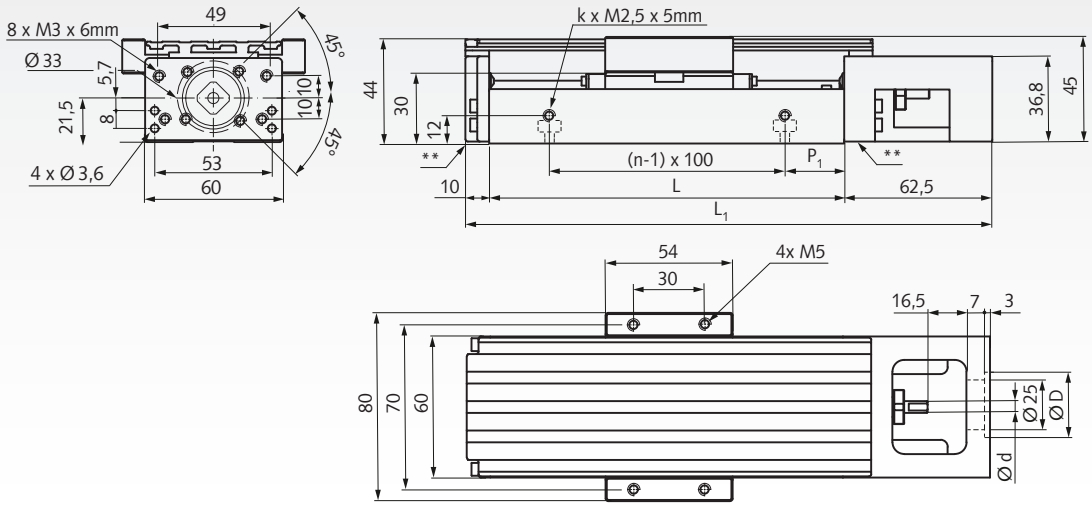

Construction Dimensions

Product No.	Lead mm	Stroke mm	$D^{+0,01/+0,03}$ mm	d^{h7} mm	L mm	L_1 mm	n Pcs.	k Pcs.	P_1 mm	Weight kg
GKS3060-50-12N-P5	5	50	28	5	150	222,5	2	2	25	1,5
GKS3060-100-12N-P5	5	100	28	5	200	272,5	2	2	50	1,9
GKS3060-150-12N-P5	5	150	28	5	250	322,5	3	3	25	2,3
GKS3060-200-12N-P5	5	200	28	5	300	372,5	3	3	50	2,6
GKS3060-300-12N-P5	5	300	28	5	400	472,5	4	4	50	3,2
GKS3060-400-12N-P5	5	400	28	5	500	572,5	5	5	50	3,9
GKS3060-500-12N-P5	5	500	28	5	600	672,5	6	6	50	4,6

Note:

Other versions in steel and aluminium as well as axes with a higher accuracy class and motor on request.
*The permissible speed depends on the motor type (stepper motor max. 100 mm/s or servo motor max. 250 mm/s).
** The marked attachments are 0.8 mm higher than the contact surface of the axis (dimension L).

Accuracy and Maximum Values

Product No.	Lead mm	Stroke mm	L1 mm	max. Speed mm/s	max. Acceleration m/s²	Positioning Accuracy mm	Repeatability Accuracy mm	Guideway Parallelism mm	max. Breakaway Torque Ncm
GKS2040-30-12N-P2	2	30	159	100	5	0,06	± 0,005	0,025	0,5
GKS2040-80-12N-P2	2	80	209	100	5	0,06	± 0,005	0,025	0,5
GKS2040-130-12N-P2	2	130	259	100	5	0,06	± 0,005	0,025	0,5
GKS2650-60-12N-P2	2	60	220	100	5	0,06	± 0,005	0,025	1,5
GKS2650-110-12N-P2	2	110	270	100	5	0,06	± 0,005	0,025	1,5
GKS2650-160-12N-P2	2	160	320	100	5	0,06	± 0,005	0,025	1,5
GKS2650-210-12N-P2	2	210	370	100	5	0,06	± 0,005	0,025	1,5
GKS3060-50-12N-P5	5	50	222,5	250	15	0,06	± 0,005	0,025	7
GKS3060-100-12N-P5	5	100	272,5	250	15	0,06	± 0,005	0,025	7
GKS3060-150-12N-P5	5	150	322,5	250	15	0,06	± 0,005	0,025	7
GKS3060-200-12N-P5	5	200	372,5	250	15	0,06	± 0,005	0,025	7
GKS3060-300-12N-P5	5	300	472,5	250	15	0,06	± 0,005	0,025	7
GKS3060-400-12N-P5	5	400	572,5	250	15	0,1	± 0,005	0,035	7
GKS3060-500-12N-P5	5	500	672,5	250	15	0,1	± 0,005	0,035	7

Load Ratings, Moments and Moments of Inertia

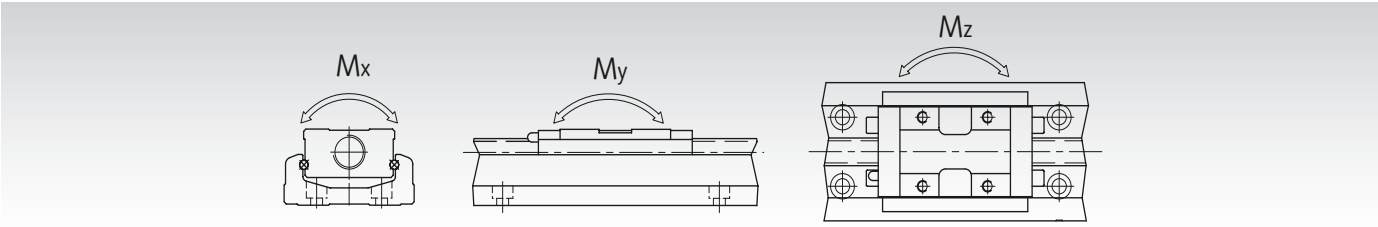

Product No.	Guide Elements: Dynamic Load N	Guide Elements: Static Load N	Static Moment M_X Nm	Static Moment M_Y Nm	Static Moment M_Z Nm	Ball Screw Drive: Spindle-Ø mm	Lead mm	Load Rating dyn. C N	Load Rating stat. C_0 N	Area Moments of Inertia I_x mm⁴	I_y mm⁴
GKS2040-30-12N-P2	2872	5040	66,4	24,8	24,8	6	2	550	920	5970	65832
GKS2040-80-12N-P2	2872	5040	66,4	24,8	24,8	6	2	550	920	5970	65832
GKS2040-130-12N-P2	2872	5040	66,4	24,8	24,8	6	2	550	920	5970	65832
GKS2650-60-12N-P2	5792	9720	166,4	67,2	67,2	8	2	1700	3200	14924	159494
GKS2650-110-12N-P2	5792	9720	166,4	67,2	67,2	8	2	1700	3200	14924	159494
GKS2650-160-12N-P2	5792	9720	166,4	67,2	67,2	8	2	1700	3200	14924	159494
GKS2650-210-12N-P2	5792	9720	166,4	67,2	67,2	8	2	1700	3200	14924	159494
GKS3060-50-12N-P5	9280	16160	342,4	132,8	132,8	10	5	2730	4440	31840	340116
GKS3060-100-12N-P5	9280	16160	342,4	132,8	132,8	10	5	2730	4440	31840	340116
GKS3060-150-12N-P5	9280	16160	342,4	132,8	132,8	10	5	2730	4440	31840	340116
GKS3060-200-12N-P5	9280	16160	342,4	132,8	132,8	10	5	2730	4440	31840	340116
GKS3060-300-12N-P5	9280	16160	342,4	132,8	132,8	10	5	2730	4440	31840	340116
GKS3060-400-12N-P5	9280	16160	342,4	132,8	132,8	10	5	2730	4440	31840	340116
GKS3060-500-12N-P5	9280	16160	342,4	132,8	132,8	10	5	2730	4440	31840	340116

Note on Calculation

The maximum load capacity of the linear axis results from the dynamic and static loads on the guide elements. The maximum torque depends on the loads on the ball screw drive. If the axis is used vertically, we recommend checking the basic load of the ball screw in advance. The load capacity of the linear axis is often limited by the screw connection used and not by the load capacity of the axis components. The maximum permissible load capacity of the screw connection should therefore be checked in accordance with VDI 2230.

Definitions of Terms

Repeatability is specified as the maximum deviation of an actual position approached several times from any direction.

Positioning accuracy is the maximum deviation between the actual and target position. Disturbance variables such as lead errors of the spindle, the accuracy of the gearbox or the motor have a negative influence on the system.

The **breakaway torque** is the torque required to overcome the static friction.

Requirements for Mounting and Installation Location

The following requirements must be observed when installing and operating the linear axis:

- Temperature range +0°C to +70°C.
- Dry.
- Not potentially explosive.
- Flatness of the mounting surface: 0.03 mm over 300 mm.

Vertical Mounting

The linear axis can be installed vertically, but the load capacity is reduced to approx. one third. We recommend the use of a motor with brake function, as there is no mechanical brake function. Motors on request.

Levelling Edge

In principle, both sides can be used as a levelling edge. If a particularly precise alignment of the axis is required, we recommend measuring the surface and grinding it if needed to avoid unevenness caused by the anodising. If required, we also offer high-precision linear axes on request.

Cross Tables / XY Assembly

XY-Combinations are possible as long as the maximum torque is not exceeded. An adapter plate may be required. We generally recommend using two axes with synchronised control as a basis or, for short systems, a driven master axis and a passive axis. We can put these systems together for you if required.

Lubricants

Lubricant ball screw drive: Liplex H-1/2S.
Guide lubricant: Beslux-Plex.

Equipment and Mounting Parts

Our linear axes can also be equipped with motor adapter flange, coupling, motor, protective cover and sensor rail with three sensors. As standard, the linear axis is equipped without theses additional parts. We can offer suitable motor adapter flanges for different motor variants. The scope of delivery of the motor adapter flange includes screws for attaching the flange to the axis.

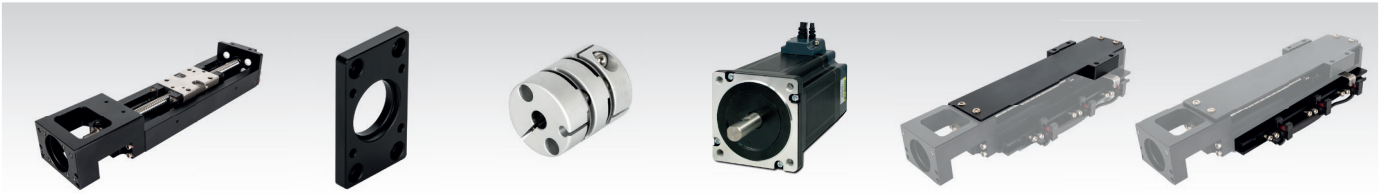

Product No. Compact Axes	Product No. Motor Adapter Flange	Product No. Coupling	Product No. Motor	Product No. Protective Cover + Body	Product No. Sensors + Rail
GKS2040-30-12N-P2	see selection table	see selection table	Motor on request	GK2040-30-C	GK2040-30-SP
GKS2040-80-12N-P2	see selection table	see selection table	Motor on request	GK2040-80-C	GK2040-80-SP
GKS2040-130-12N-P2	see selection table	see selection table	Motor on request	GK2040-130-C	GK2040-130-SP
GKS2650-60-12N-P2	see selection table	see selection table	Motor on request	GK2650-60-C	GK2650-60-SP
GKS2650-110-12N-P2	see selection table	see selection table	Motor on request	GK2650-110-C	GK2650-110-SP
GKS2650-160-12N-P2	see selection table	see selection table	Motor on request	GK2650-160-C	GK2650-160-SP
GKS2650-210-12N-P2	see selection table	see selection table	Motor on request	GK2650-210-C	GK2650-210-SP
GKS3060-50-12N-P5	see selection table	see selection table	Motor on request	GK3060-50-C	GK3060-50-SP
GKS3060-100-12N-P5	see selection table	see selection table	Motor on request	GK3060-100-C	GK3060-100-SP
GKS3060-150-12N-P5	see selection table	see selection table	Motor on request	GK3060-150-C	GK3060-150-SP
GKS3060-200-12N-P5	see selection table	see selection table	Motor on request	GK3060-200-C	GK3060-200-SP
GKS3060-300-12N-P5	see selection table	see selection table	Motor on request	GK3060-300-C	GK3060-300-SP
GKS3060-400-12N-P5	see selection table	see selection table	Motor on request	GK3060-400-C	GK3060-400-SP
GKS3060-500-12N-P5	see selection table	see selection table	Motor on request	GK3060-500-C	GK3060-500-SP

Selection table for Motor Adaptation and Coupling

Size	Motor type	Flange type	Motor Adapter Fl.	Coupling
GKS2040	Stepper motor	NEMA11	GK20-G28	FACHS19-4-5
GKS2040	Stepper motor	NEMA17	GK20-G42	FACHS19-4-5
GKS2040	Servo motor	PC Ø46	GK20-E05	FACHS19-4-8
GKS2040	Servo motor	PC Ø45	GK20-M05	FACHS19-4-8
GKS2650	Stepper motor	NEMA11	GK26-G28	FACCL21-5-5
GKS2650	Stepper motor	NEMA17	GK26-G42	FACCL21-5-5
GKS2650	Servo motor	PC Ø46	GK-H10	FACCL21-5-8
GKS2650	Servo motor	PC Ø45	GK-M10	FACCL21-5-8
GKS3060	Stepper motor	NEMA11	-	-
GKS3060	Stepper motor	NEMA17	GK-G42	FACCL21-5-5
GKS3060	Servo motor	PC Ø46	GK-H10	FACCL21-5-8
GKS3060	Servo motor	PC Ø45	GK-M10	FACCL21-5-8

Assembly Example

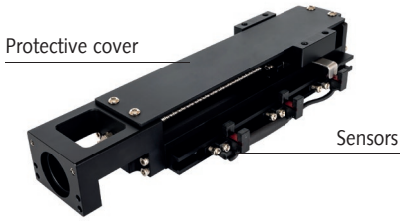

Information on the Sensors

- Scope of delivery: Sensor rail with 3 sensors.
- Brand: Panasonic.
- Type: PM-F25.
- Voltage: 5~24V DC ± 10% (with P-P ripple below 10%).
- Current consumption: less than 15mA.
- Light barrier sensor: NPN type.

Please refer to the operating instructions for the GKS linear axis for installation instructions and a circuit diagram of the sensor system.

Output status:
Black: ON when light is received.
White: ON when light is blocked.

Response time:
Light receiving condition: Less than 20µs.
Light interrupted condition: max. 80µs
(response frequency above 3kHz).

Motor Adapter Flanges

Flange for GKS2040, Stepper Motor, NEMA11, GK20-G28

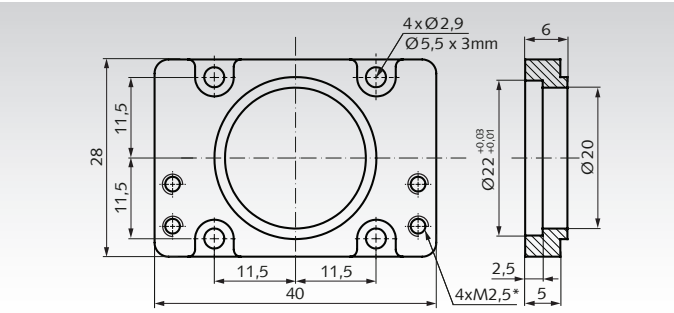

Flange for GKS2040, Stepper Motor, NEMA17, GK20-G42

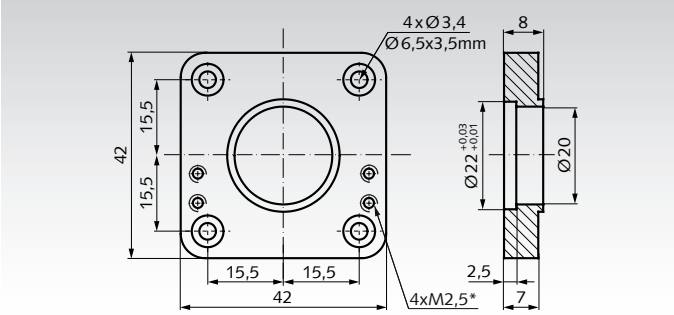

Flange for GKS2040, Servo Motor, PCØ 46mm, GK20-E05

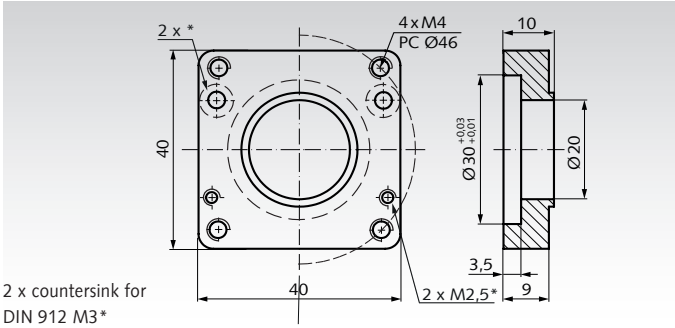

2 x countersink for
DIN 912 M3*

Flange for GKS2040, Servo Motor, PCØ 45mm, GK20-M05

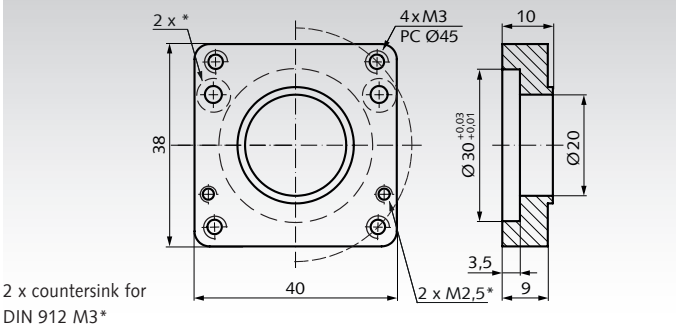

2 x countersink for
DIN 912 M3*

Flange for GKS2650, Stepper Motor, NEMA11, GK26-G28

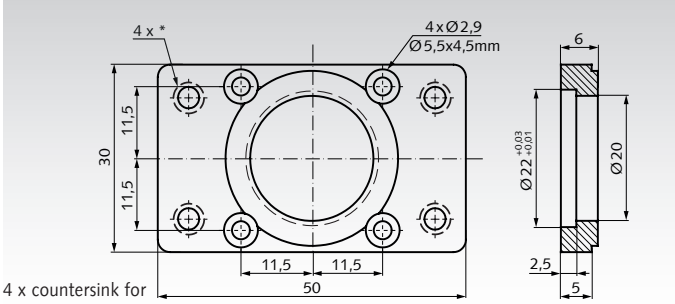

4 x countersink for
DIN 912 M3*

Flange for GKS2650, Stepper Motor, NEMA17, GK26-G42

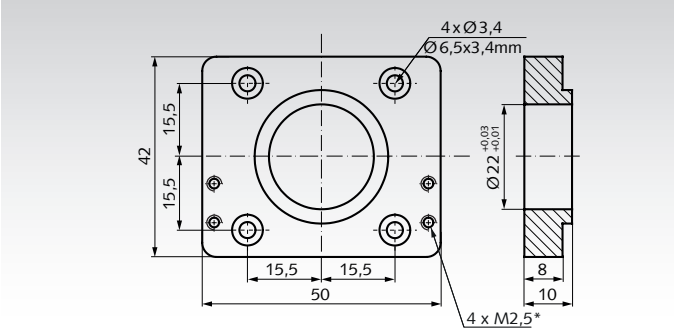

Flange for GKS2650, GKS3060, Servo Motor, PCØ 46mm, GK-H10

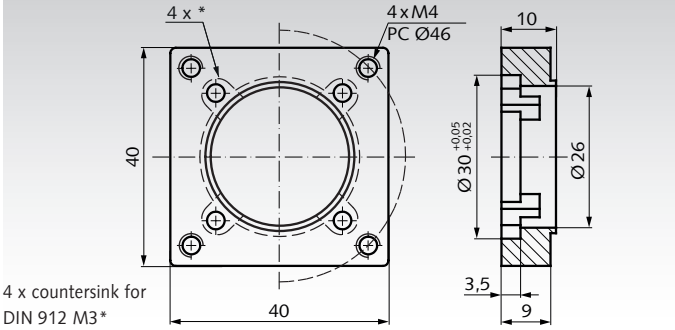

4 x countersink for
DIN 912 M3*

Flange for GKS2650, GKS3060, Servo Motor, PCØ 45mm, GK-M10

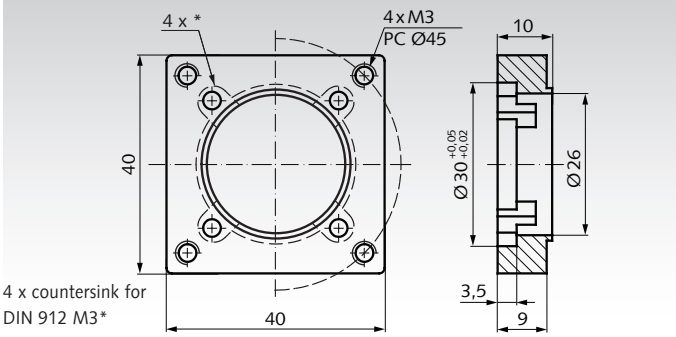

4 x countersink for
DIN 912 M3*

Flange for GKS3060, Stepper Motor, NEMA17, GK-G42

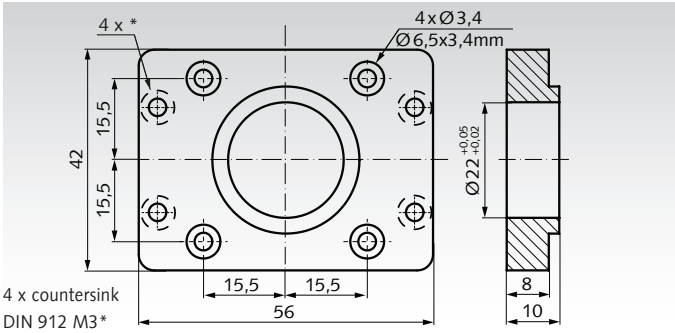

4 x countersink
DIN 912 M3*

Note:

The dimensions marked with * refer to the screw connection of the flange to the axis and are not relevant for mounting the motor. The screws for fastening to the axis are included in the scope of delivery of the motor adapter flange.

Apparatus Castors with Perforated Plate, Rubber Bandage TPE, Light Version, Electrically Conductive

Swivel Castors

Material: Fork: sheet steel, zinc-plated.
Tread: Thermoplastic rubber, grey, electrical conductive and antistatic (10^4 Ω).
Wheel body: Plastic, screwed.
Wheel bearing: Ball bearing.
Swivel bearing: Double ball ring.

For indoor use. Low-noise operation with low rolling and swivelling resistance. Non-marking. The tread is slightly oily and can cause contact discolouration on sensitive surfaces.

Temperature range: -20°C to +60°C.

Ordering Details: e.g.: Product No. 77710050EL, Swivel castor, TPE light, electrically conductive, D 50 mm

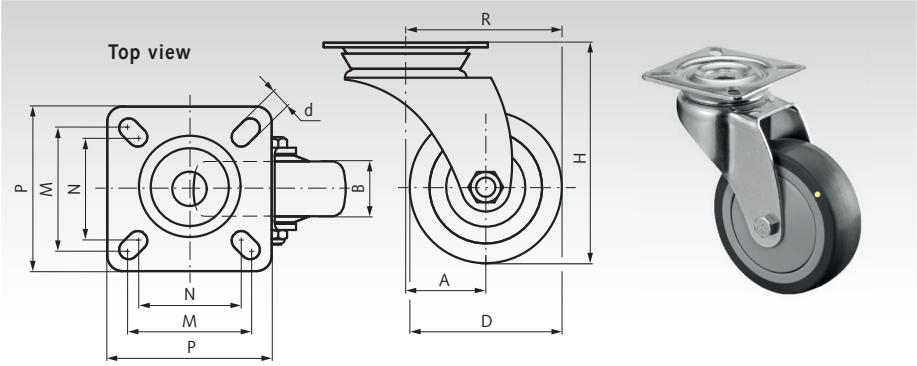

Product No.	D mm	B mm	H mm	A mm	R mm	d mm	P mm	M mm	N mm	Load capacity kg	Weight kg
777 100 50EL	50	18	73	26	51	6,3	54	40	34	50	0,18
777 100 75EL	75	24	103	38	75,5	6,3	60	48	38	60	0,28

Swivel Castors with Brakes

Material: Fork: sheet steel, zinc-plated.
Tread: Thermoplastic rubber, grey, electrical conductive and antistatic (10^4 Ω).
Wheel body: Plastic, screwed.
Wheel bearing: Ball bearing.
Swivel bearing: Double ball ring.

For indoor use. Low-noise operation with low rolling and swivelling resistance. Non-marking. The tread is slightly oily and can cause contact discolouration on sensitive surfaces.

Temperature range: -20°C to +60°C.

Ordering Details: e.g.: Product No. 77711050EL, Swivel castor with brake, TPE light, electrically conductive, D 50 mm

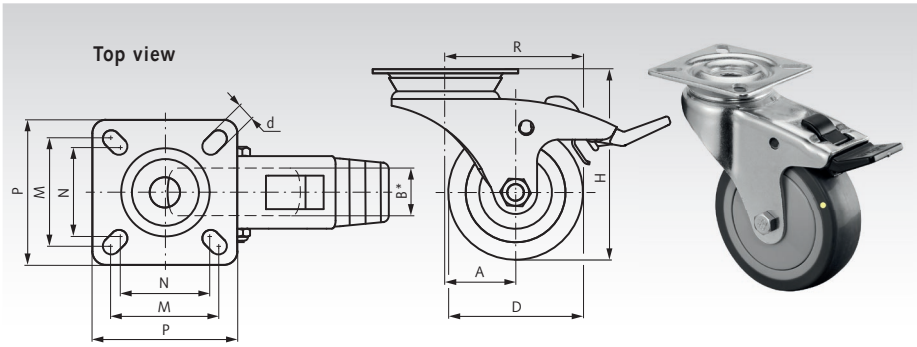

Product No.	D mm	B mm	H mm	A mm	R mm	d mm	P mm	M mm	N mm	Load capacity kg	Weight kg
777 110 50EL	50	18	73	26	51	6,3	54	40	34	50	0,20
777 110 75EL	75	24	103	38	75,5	6,3	60	48	38	60	0,32

Fixed Castors

Material: Fork: sheet steel, zinc-plated.
Tread: Thermoplastic rubber, grey, electrical conductive and antistatic (10^4 Ω).
Wheel body: Plastic, screwed.
Wheel bearing: Ball bearing.

For indoor use. Low-noise operation with low rolling and swivelling resistance. Non-marking. The tread is slightly oily and can cause contact discolouration on sensitive surfaces.

Temperature range: -20°C to +60°C.

Ordering Details: e.g.: Product No. 77712050EL, Fixed castor, TPE light, electrically conductive, D 50 mm

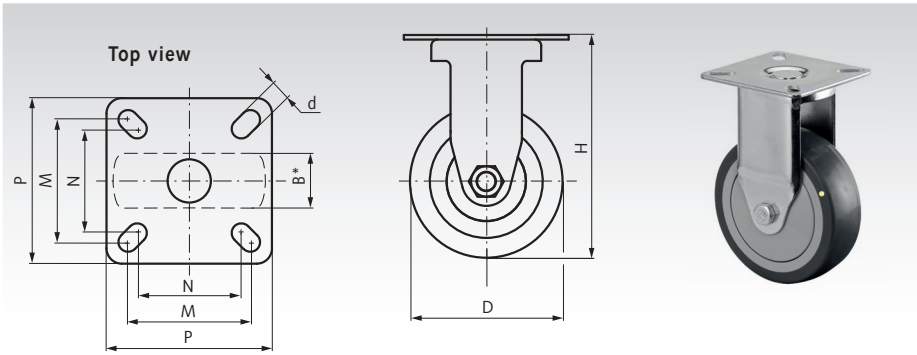

Product No.	D mm	B mm	H mm	d mm	P mm	M mm	N mm	Load capacity kg	Weight kg
777 120 50EL	50	18	73	6,3	54	40	34	50	0,14
777 120 75EL	75	24	103	6,3	60	48	38	60	0,24

* Wheel width

Note to electrical conductivity see page 49

Apparatus Castors with Back Hole, Rubber Bandage TPE, Light Version, Electrically Conductive

Swivel Castors

Material: Fork: sheet steel, zinc-plated.
Tread: Thermoplastic rubber, grey, electrical conductive and antistatic (10^4 Ω).
Wheel body: Plastic, screwed.
Wheel bearing: Ball bearing.
Swivel bearing: Double ball ring.

For indoor use. Low-noise operation with low rolling and swivelling resistance. Non-marking. The tread is slightly oily and can cause contact discolouration on sensitive surfaces.
Temperature range: -20°C to +60°C.

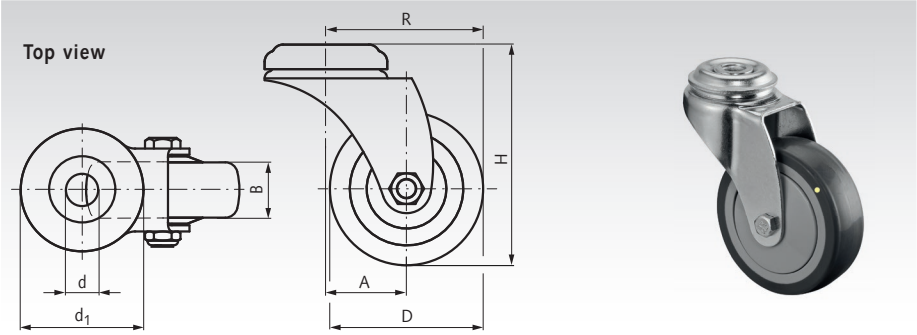

Ordering Details: e.g.: Product No. 77713050EL,
Swivel castor, TPE light, electrically conductive, D 50 mm

Product No.	D mm	B mm	H mm	A mm	R mm	d mm	d_1 mm	Load capacity kg	Weight kg
777 130 50EL	50	18	73	26	51	10,2	38,1	50	0,16
777 130 75EL	75	24	103	38	75,5	10,2	43,2	60	0,26

Swivel Castors with Brakes

Material: Fork: sheet steel, zinc-plated.
Tread: Thermoplastic rubber, grey, electrical conductive and antistatic (10^4 Ω).
Wheel body: Plastic, screwed.
Wheel bearing: Ball bearing.
Swivel bearing: Double ball ring.

For indoor use. Low-noise operation with low rolling and swivelling resistance. Non-marking. The tread is slightly oily and can cause contact discolouration on sensitive surfaces.
Temperature range: -20°C to +60°C.

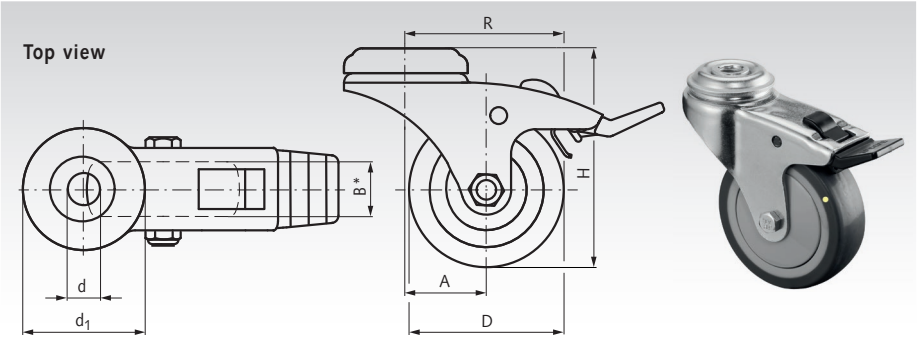

Ordering Details: e.g.: Product No. 77714050EL,
Swivel castor with brake, TPE light, electrically conductive, D 50 mm

Product No.	D mm	B mm	H mm	A mm	R mm	d mm	d_1 mm	Load capacity kg	Weight kg
777 140 50EL	50	18	73	26	51	10,2	38,1	50	0,18
777 140 75EL	75	24	103	38	75,5	10,2	43,2	60	0,32

* Wheel width

Note to electrical Antistatic and Conductivity

Wheels and castors are considered electrically antistatic, if the ohmic resistance is 10^7 Ω or less.

Wheels and castors are considered electrically conductive, if the ohmic resistance is 10^4 Ω or less, even less than parts named antistatic. So, the parts which are named electrically conductive are also antistatic.

Heat-resistant Stainless Steel Transport Castors with Perforated Plate, Thermoplastic Compound

SwivelCcastors

Material:
Fork: stainless steel.
Tread / wheel body: thermoplastic compound, black, bolted.
Wheel bearing: Plain bearing.
Swivel bearing: Double ball ring.

Stainless steel housing and wheel body made of thermoplastic compound are suitable for working areas with high temperature differences and in the food sector.

Temperature range: -40°C to +280°C (short term until +300°C).

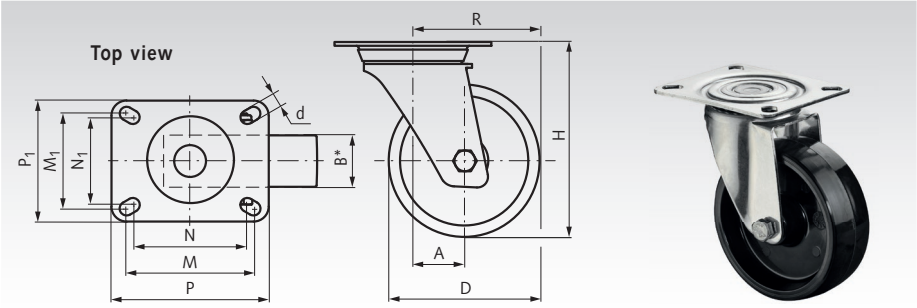

Ordering Details: e.g.: Product No. 77776100SS, Heat-resistant stainless swivel castor, D 100 mm

Product No.	D mm	B mm	H mm	A mm	R mm	d mm	P mm	P_1 mm	M mm	M_1 mm	N mm	N_1 mm	Load capacity kg	Weight kg
777 761 00SS	100	32	127	32	82	9	95	80	82	62	73	52	130	0,56

Swivel Castors with Brakes

Material:
Fork: stainless steel.
Tread / wheel body: thermoplastic compound, black, bolted.
Wheel bearing: Plain bearing.
Swivel bearing: Double ball ring.

Stainless steel housing and wheel body made of thermoplastic compound are suitable for working areas with high temperature differences and in the food sector.

Temperature range: -40°C to +280°C (short term until +300°C).

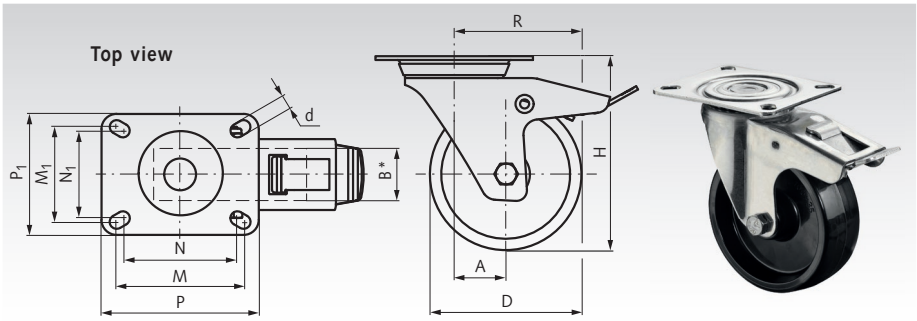

Ordering Details: e.g.: Product No. 77777100SS, Heat-resistant stainless swivel castor with brake, D 100 mm

Product No.	D mm	B mm	H mm	A mm	R mm	d mm	P mm	P_1 mm	M mm	M_1 mm	N mm	N_1 mm	Load capacity kg	Weight kg
777 771 00SS	100	32	127	32	82	9	95	80	82	62	73	52	130	0,68

* Wheel width

Fixed Castors

Material:
Fork: stainless steel.
Tread / wheel body: thermoplastic compound, black, bolted.
Wheel bearing: Plain bearing.

Stainless steel housing and wheel body made of thermoplastic compound are suitable for working areas with high temperature differences and in the food sector.

Temperature range: -40°C to +280°C (short term until +300°C).

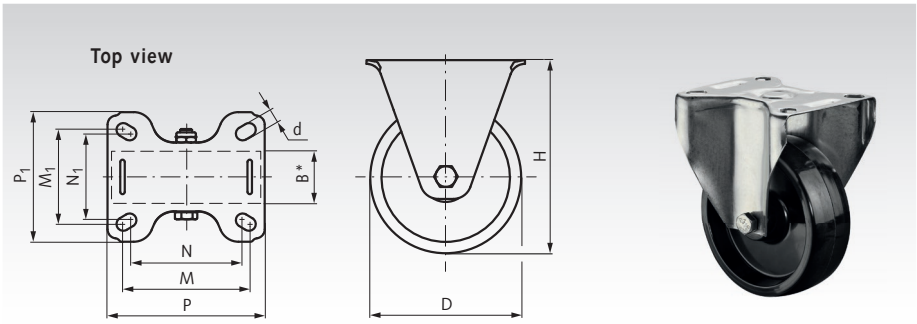

Ordering Details: e.g.: Product No. 77778100SS, Heat-resistant stainless fixed castor, D 100 mm

Product No.	D mm	B mm	H mm	d mm	P mm	P_1 mm	M mm	M_1 mm	N mm	N_1 mm	Load capacity kg	Weight kg
777 781 00SS	100	32	127	9	100	84	82	62	73	52	130	0,44

* Wheel width

Stainless Steel Transport Castors with Perforated Plate, PU Bandage

Swivel Castors

Material:
Fork: Stainless steel.
Tread: Polyurethane 98 +/-4° Shore A.
Wheel body: Plastic, screwed.
Wheel bearing: Plain bearing.
Swivel bearing: Double ball ring.

For interior and exterior use. Non-marking and abrasion resistant. Good resistance to oil, grease, petrol and chemicals.

Temperature range: -20°C to +70°C.

Ordering Details: e.g.: Product No. 77761080SS, Stainless swivel castor, polyurethane, D 80 mm

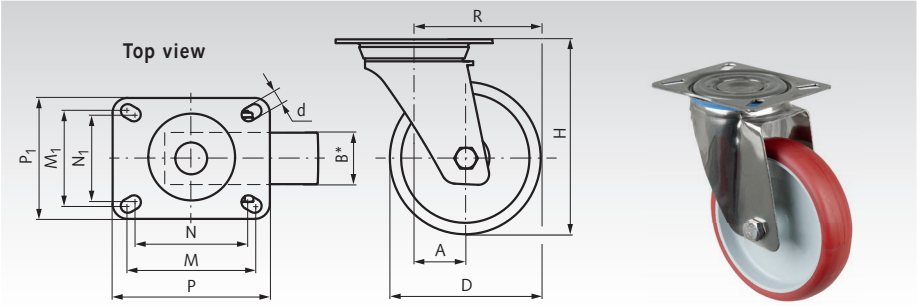

Product No.	D mm	B mm	H mm	A mm	R mm	d mm	P mm	P_1 mm	M mm	M_1 mm	N mm	N_1 mm	Load capacity kg	Weight kg
777 610 80SS	80	28	108	32	72	9	95	80	82	62	73	52	100	0,4
777 611 00SS	100	30	127	32	82	9	95	80	82	62	73	52	130	0,5
777 611 25SS	125	32	155	32	94,5	9	95	80	82	62	73	52	130	0,6
777 611 50SS	150	35	192	52	127	11	129	106	105	84	95	55	200	1,2
777 612 00SS	200	45	240	48	148	11	129	106	105	84	95	55	200	1,7

Swivel Castors with Brakes

Material:
Fork: Stainless steel.
Tread: Polyurethane 98 +/-4° Shore A.
Wheel body: Plastic, screwed.
Wheel bearing: Plain bearing.
Swivel bearing: Double ball ring.

For interior and exterior use. Non-marking and abrasion resistant. Good resistance to oil, grease, petrol and chemicals.

Temperature range: -20°C to +70°C.

Ordering Details: e.g.: Product No. 77762080SS, Stainless Swivel castor with brake, polyurethane, D 80 mm

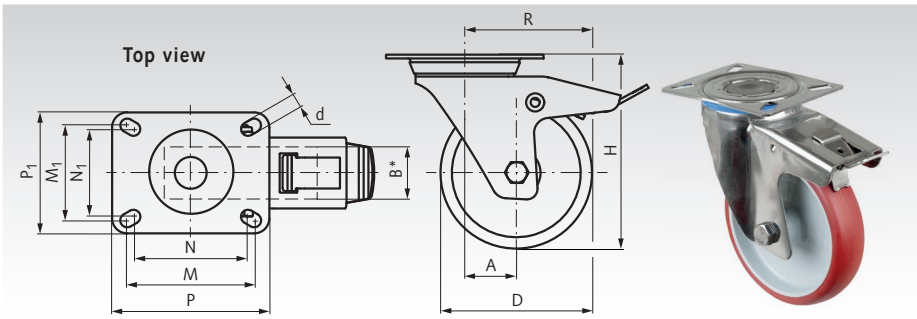

Product No.	D mm	B mm	H mm	A mm	R mm	d mm	P mm	P_1 mm	M mm	M_1 mm	N mm	N_1 mm	Load capacity kg	Weight kg
777 620 80SS	80	28	108	32	72	9	95	80	82	62	73	52	100	0,5
777 621 00SS	100	30	127	32	82	9	95	80	82	62	73	52	130	0,6
777 621 25SS	125	32	155	32	94,5	9	95	80	82	62	73	52	130	0,7
777 621 50SS	150	35	192	52	127	11	129	106	105	84	95	55	200	1,3
777 622 00SS	200	45	240	48	148	11	129	106	105	84	95	55	200	1,8

Fixed Castors

Material:
Fork: Stainless steel.
Tread: Polyurethane 98 +/-4° Shore A.
Wheel body: Plastic, screwed.
Wheel bearing: Plain bearing.

For interior and exterior use. Non-marking and abrasion resistant. Good resistance to oil, grease, petrol and chemicals.

Temperature range: -20°C to +70°C.

Ordering Details: e.g.: Product No. 77763080SS, Stainless fixed castor, polyurethane, D 80 mm

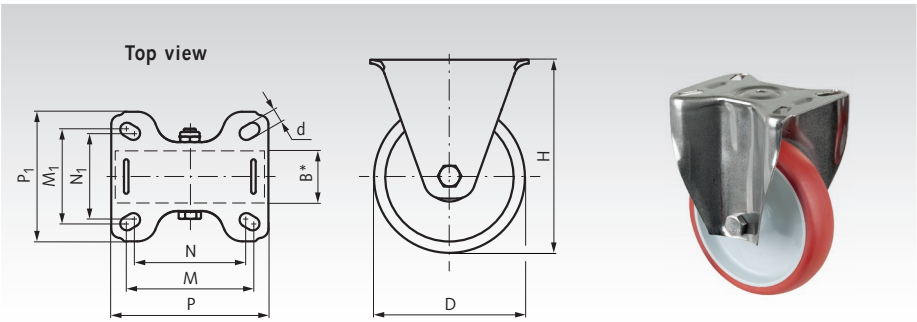

Product No.	D mm	B mm	H mm	d mm	P mm	P_1 mm	M mm	M_1 mm	N mm	N_1 mm	Load capacity kg	Weight kg
777 630 80SS	80	28	108	9	100	83	80	62	74	55	100	0,3
777 631 00SS	100	30	127	9	100	83	80	62	74	55	130	0,4
777 631 25SS	125	32	155	9	100	83	80	62	74	55	130	0,5
777 631 50SS	150	35	192	11	135	110	107	83	95	55	200	1,0
777 632 00SS	200	45	240	11	135	110	107	83	95	55	200	1,5

* Wheel width

Heavy Duty Transport Castors with Perforated Plate, White Plastic Wheel

Swivel Castors

Material: Fork: sheet steel, zinc-plated.
Tread / wheel body: Plastic.
Polyamide, cast in one piece, bolted.
Wheel bearing: Ball bearing.
Swivel bearing: Double ball ring.

For indoor and outdoor use. Suitable for high loads. Widest resistant to salt, grease, acids and alkalis. Non-marking and very abrasion resistant.

Temperature range: -20°C to +80°C
(short-term -40°C to +100°C).
From +35°C the load capacity decreases.

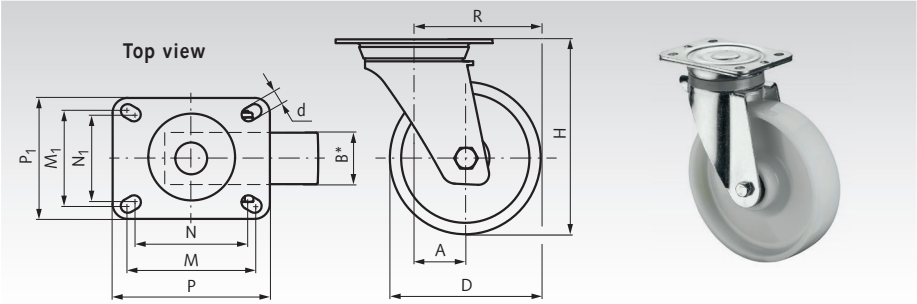

Ordering Details: e.g.: Product No. 77721080H, Heavy duty swivel castor, polyamide, D 80 mm

Product No.	D mm	B mm	H mm	A mm	R mm	d mm	P mm	P_1 mm	M mm	M_1 mm	N mm	N_1 mm	Load capacity kg	Weight kg
777 210 80H	80	30	112	38	78	9**	105	85	80	60	-		150	0,9
777 211 00H	100	35	153	48	98	11**	138	109	105	75	-	-	500	2,2
777 211 25H	125	50	178	46	108,5	11**	138	110	105	75	-	-	600	2,8
777 211 50H	150	47	209	48	123	11**	138	110	105	75	-	-	600	3,0
777 212 00H	200	50	255	52	152	11**	138	110	105	75	-	-	600	3,6

Swivel Castors with Brakes

Material: Fork: sheet steel, zinc-plated.
Tread / wheel body: Plastic.
Polyamide, cast in one piece, bolted.
Wheel bearing: Ball bearing.
Swivel bearing: Double ball ring.

For indoor and outdoor use. Suitable for high loads. Widest resistant to salt, grease, acids and alkalis. Non-marking and very abrasion resistant.

Temperature range: -20°C to +80°C
(short-term -40°C to +100°C).
From +35°C the load capacity decreases.

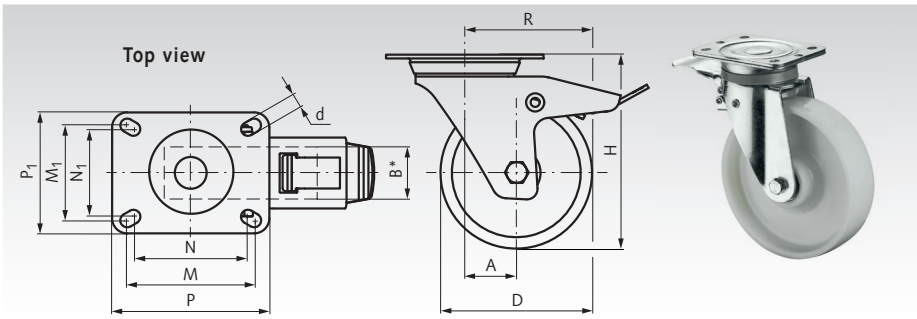

Ordering Details: e.g.: Product No. 77722080H, Heavy duty swivel castor with brake, polyamide, D 80 mm

Product No.	D mm	B mm	H mm	A mm	R mm	d mm	P mm	P_1 mm	M mm	M_1 mm	N mm	N_1 mm	Load capacity kg	Weight kg
777 220 80H	80	30	112	38	78	9**	105	85	80	60	-	-	150	1,2
777 221 25H	125	50	178	46	108,5	11**	138	110	105	75	-	-	600	3,1
777 221 50H	150	47	209	48	123	11**	138	110	105	75	-	-	600	3,2
777 222 00H	200	50	255	52	152	11**	138	110	105	75	-	-	600	3,8

Fixed Castors

Material: Fork: sheet steel, zinc-plated.
Tread / wheel body: Plastic.
Polyamide, cast in one piece, bolted.
Wheel bearing: Ball bearing.

For indoor and outdoor use. Suitable for high loads. Widest resistant to salt, grease, acids and alkalis. Non-marking and very abrasion resistant.

Temperature range: -20°C to +80°C
(short-term -40°C to +100°C).
From +35°C the load capacity decreases.

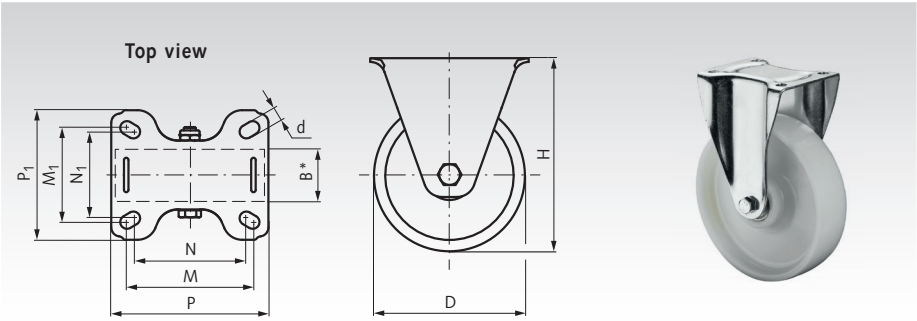

Ordering Details: e.g.: Product No. 77723080H, Heavy duty fixed castor, polyamide, D 80 mm

Product No.	D mm	B mm	H mm	d mm	P mm	P_1 mm	M mm	M_1 mm	N mm	N_1 mm	Load capacity kg	Weight kg
777 230 80H	80	30	112	9	100	85	80	60	75	45	150	0,6
777 231 00H	100	35	153	11**	135	113	105	75	-	-	500	1,2
777 231 25H	125	50	178	11**	135	113	105	75	-	-	600	1,8
777 231 50H	150	47	209	11**	135	113	105	75	-	-	600	2,1
777 232 00H	200	50	255	11**	135	113	105	75	-	-	600	2,3

* Wheel width ** No slotted hole, hole with Ø d.

Heavy Duty Transport Castors with Perforated Plate, PU Bandage

Swivel Castors

Material: Fork: sheet steel, zinc-plated.
Tread: Prothane®,
Cast polyurethane 95 +/-3° Shore A.
Wheel body: Aluminium, bolted.
Wheel bearing: Ball bearing.
Swivel bearing: Double ball ring.

For indoor and outdoor use. Suitable for high loads. Non-marking and abrasion resistant. Good resistance to oil, grease, petrol and chemicals.

Temperature range: -20°C to +70°C.

Ordering Details: e.g.: Product No. 77761080H, Heavy duty swivel castor, PU, D 80 mm

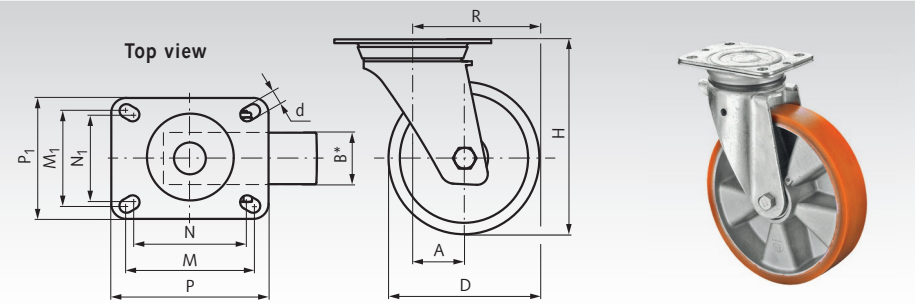

Product No.	D mm	B mm	H mm	A mm	R mm	d mm	P mm	P_1 mm	M mm	M_1 mm	N mm	N_1 mm	Load capacity kg	Weight kg
777 610 80H	80	40	127	42	82	9	105	85	85	65	75	55	250	1,2
777 611 00H	100	40	137	42	92	9	105	85	85	65	75	55	280	1,4
777 611 25H	125	50	178	46	108,5	11**	138	110	105	75	-	-	450	3,0
777 611 50H	150	50	209	48	123	11**	138	110	105	75	-	-	550	3,3
777 612 00H	200	50	255	52	152	11**	138	110	105	75	-	-	600	3,7

Swivel Castors with Brakes

Material: Fork: sheet steel, zinc-plated.
Tread: Prothane®,
Cast polyurethane 95 +/-3° Shore A.
Wheel body: Aluminium, bolted.
Wheel bearing: Ball bearing.
Swivel bearing: Double ball ring.

For indoor and outdoor use. Suitable for high loads. Non-marking and abrasion resistant. Good resistance to oil, grease, petrol and chemicals.

Temperature range: -20°C to +70°C.

Ordering Details: e.g.: Product No. 77762080H, Heavy duty swivel castor with brake, PU, D 80 mm

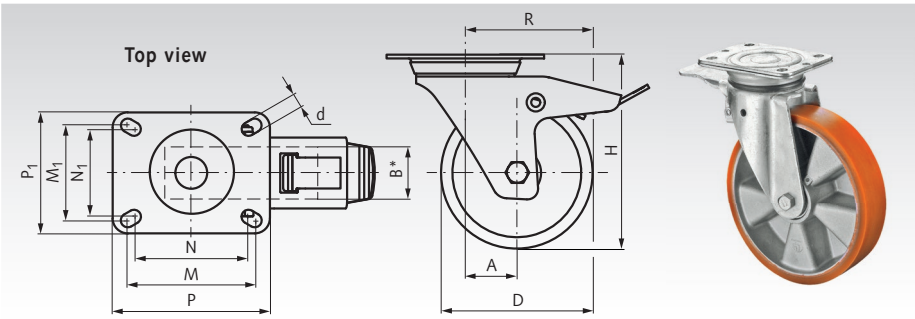

Product No.	D mm	B mm	H mm	A mm	R mm	d mm	P mm	P_1 mm	M mm	M_1 mm	N mm	N_1 mm	Load capacity kg	Weight kg
777 620 80H	80	40	127	42	82	9	105	85	85	65	75	55	250	1,6
777 621 00H	100	40	137	42	92	9	105	85	85	65	75	55	280	2,0
777 621 25H	125	50	178	46	108,5	11**	138	110	105	75	-	-	450	3,4
777 621 50H	150	50	209	48	123	11**	138	110	105	75	-	-	550	3,7
777 622 00H	200	50	255	52	152	11**	138	110	105	75	-	-	600	4,1

Fixed Castors

Material: Fork: sheet steel, zinc-plated.
Tread: Prothane®,
Cast polyurethane 95 +/-3° Shore A.
Wheel body: Aluminium, bolted.
Wheel bearing: Ball bearing.

For indoor and outdoor use. Suitable for high loads. Non-marking and abrasion resistant. Good resistance to oil, grease, petrol and chemicals.

Temperature range: -20°C to +70°C.

Ordering Details: e.g.: Product No. 77763080H, Heavy duty fixed castor, PU, D 80 mm

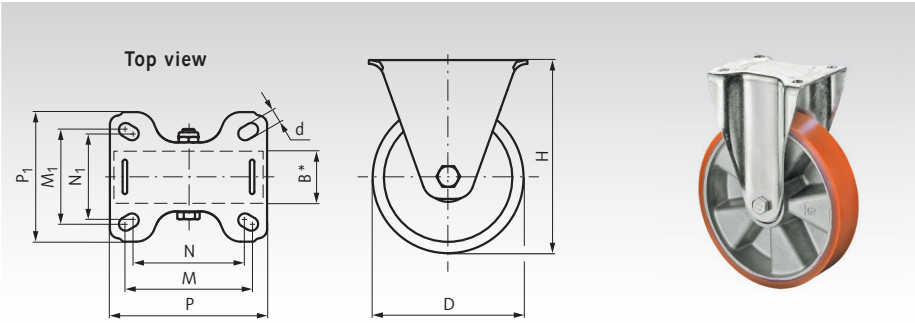

Product No.	D mm	B mm	H mm	d mm	P mm	P_1 mm	M mm	M_1 mm	N mm	N_1 mm	Load capacity kg	Weight kg
777 630 80H	80	40	127	9	105	87	83	65	73	52	250	0,9
777 631 00H	100	40	137	9	105	87	83	65	73	52	280	1,2
777 631 25H	125	50	178	11**	135	112	105	75	-	-	450	2,0
777 631 50H	150	50	209	11**	135	112	105	75	-	-	550	2,3
777 632 00H	200	50	255	11**	135	112	105	75	-	-	600	2,7

* Wheel width ** No slotted hole, hole with Ø d.

Super Heavy Duty Transport Castors with Perforated Plate, PU Bandage

Swivel Castors

Material: Fork: steel, zinc-plated.
Tread: Prothane®,
Cast polyurethane 95 +/-3° Shore A.
Wheel body: Cast iron, bolted.
Wheel bearing: ball bearing.
Swivel bearing: ball bearing.

For indoor and outdoor use. Suitable for very high loads. Non-marking and abrasion resistant. Good resistance to oil, grease, petrol and chemicals.

Temperature range: -20°C to +70°C.

Ordering Details: e.g.: Product No. 77761100SH, Super heavy duty swivel castor, PU, D 80 mm

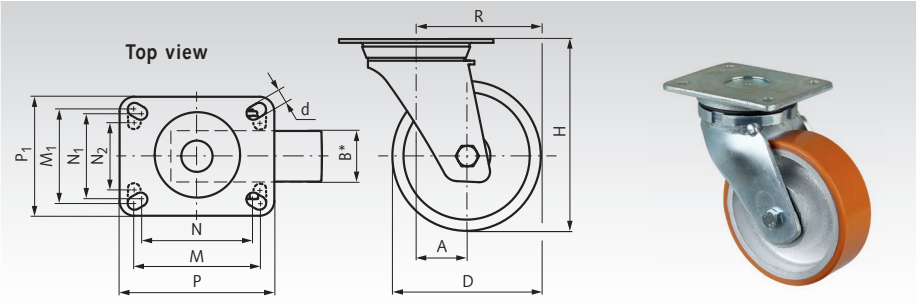

Product No.	D mm	B mm	H mm	A mm	R mm	d mm	P mm	P_1 mm	M mm	M_1 mm	N mm	N_1 mm	N_2 mm	Load capacity kg	Weight kg
777 611 00SH	100	50	145	35	85	11	138	110	105	80	-	-	75	400	4,3
777 611 25SH	125	50	170	50	112,5	11	138	110	105	80	-	-	75	550	5,1
777 611 50SH	150	50	195	60	135	11	138	110	105	80	-	-	75	800	6,1
777 612 00SH	200	50	245	60	160	11	138	110	105	80	-	-	75	1000	11,2

Swivel Castors with Brakes

Material: Fork: steel, zinc-plated.
Tread: Prothane®,
Cast polyurethane 95 +/-3° Shore A.
Wheel body: Cast iron, bolted.
Wheel bearing: ball bearing.
Swivel bearing: ball bearing.

For indoor and outdoor use. Suitable for very high loads. Non-marking and abrasion resistant. Good resistance to oil, grease, petrol and chemicals.

Temperature range: -20°C to +70°C.

Ordering Details: e.g.: Product No. 77762100SH, Super heavy duty swivel castor with brake, PU, D 80 mm

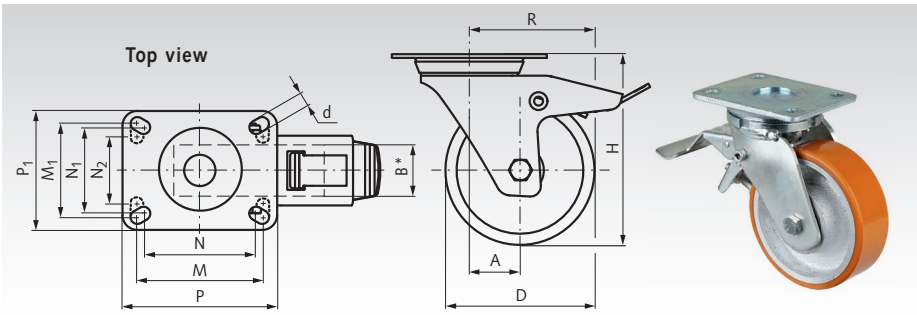

Product No.	D mm	B mm	H mm	A mm	R mm	d mm	P mm	P_1 mm	M mm	M_1 mm	N mm	N_1 mm	N_2 mm	Load capacity kg	Weight kg
777 621 00SH	100	50	145	35	85	11	138	110	105	80	-	-	75	400	4,6
777 621 25SH	125	50	170	50	112,5	11	138	110	105	80	-	-	75	550	5,8
777 621 50SH	150	50	195	60	135	11	138	110	105	80	-	-	75	800	6,7
777 622 00SH	200	50	245	60	160	11	138	110	105	80	-	-	75	1000	11,9

Fixed Castors

Material: Fork: steel, zinc-plated.
Tread: Prothane®,
Cast polyurethane 95 +/-3° Shore A.
Wheel body: Cast iron, bolted.
Wheel bearing: ball bearing.

For indoor and outdoor use. Suitable for very high loads. Non-marking and abrasion resistant. Good resistance to oil, grease, petrol and chemicals.

Temperature range: -20°C to +70°C.

Ordering Details: e.g.: Product No. 77763100SH, Super heavy duty fixed castor, PU, D 80 mm

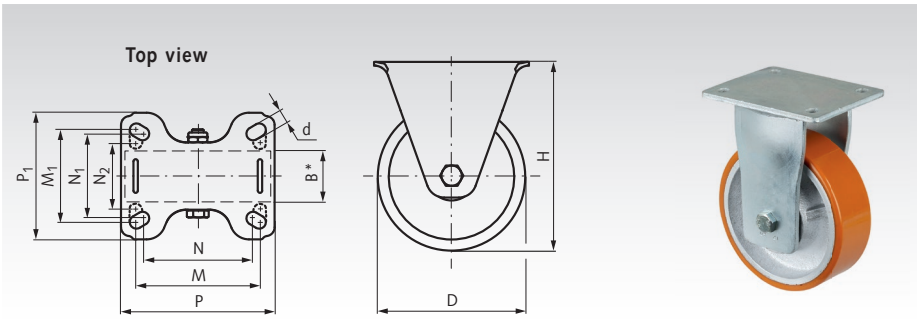

Product No.	D mm	B mm	H mm	d mm	P mm	P_1 mm	M mm	M_1 mm	N mm	N_1 mm	N_2 mm	Load capacity kg	Weight kg
777 631 00SH	100	50	145	11	138	110	105	80	-	-	75	400	3,1
777 631 25SH	125	50	170	11	138	110	105	80	-	-	75	550	4,0
777 631 50SH	150	50	195	11	138	110	105	80	-	-	75	800	4,8
777 632 00SH	200	50	245	11	138	110	105	80	-	-	75	1000	6,1

* Wheel width

Universal Rollers

Material: Glued multiplex plywood with nubbed anti-slip covering.

4 swivel casters with the same height, suitable for narrow aisles and high mobility. Practical helpers for the transport of heavy objects. Ideal for intralogistics and warehouse work.

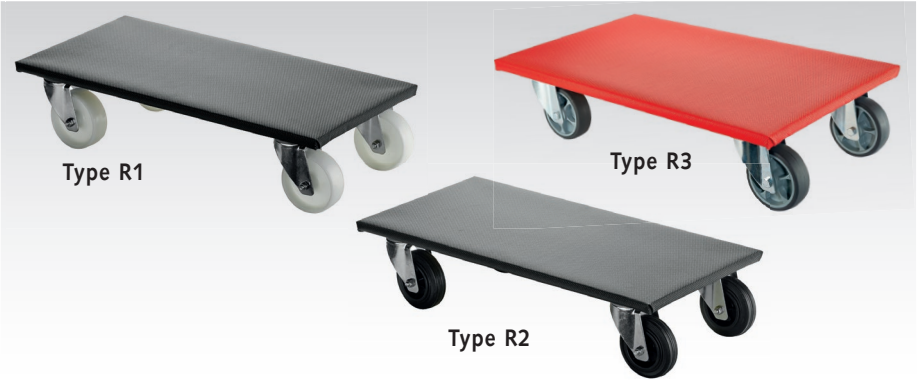

Ordering Details: e.g.: Product No. 77790101, Universal roller R1, plastic wheel, 300 x 600 x 140mm

Product No.	Type, Wheels	Wheel-Ø mm	Plate size mm	Height mm	Colour of Slip mat	Load capacity kg	Weight kg
777 901 01	R1, Plastic wheel	100	300 x 600	140	Grey	350	4,5
777 901 02	R1, Plastic wheel	100	350 x 600	145	Grey	500	5,1
777 901 03	R2, Rubber wheel	100	300 x 600	140	Grey	250	4,5
777 901 04	R2, Rubber wheel	100	350 x 600	145	Grey	250	5,1
777 901 05	R3, Thermoplastic wheel	100	350 x 600	145	Red	330	5,2

Roller Stands

Material: Steel, black lacquered.

Collapsible material stands with 2-foot construction for feeding material from sheets or bars.

Type S1:
Universal roller stand with castor and swivelling ball bar. Infinitely variable height adjustment. Ball bar with 8 balls.

Type S2:
Roller stand with V-shaped ball rollers, Ø 25mm. For poles with profile Ø from 2cm to 40cm.

Ordering Details: e.g.: Product No. 77790201, Roller stand S1

Product No.	Type	Ball casters Stk	Idler-Ø mm	Roll width mm	min. height mm	Max. height mm	Load capacity* kg	Weight kg
777 902 01	S1	8	60	350	758	1197	200	11,4
777 902 02	S2	4	-	-	715	1060	100	10,1

* Load per unit area over the entire support width. Type S2: If only 2 ball transfer units are loaded, the load capacity is half.

Simple Thrust Ball Bearings

Material: steel, zinc-plated.

Simple thrust ball bearing with one row of balls, suitable for turntables, or similar devices with uniform load distribution. Due to the simple construction, not designed for moments outside the axis of rotation. Mounting must be horizontal only.

Type A: With flange at the top.
Type B: Without flange at the top.

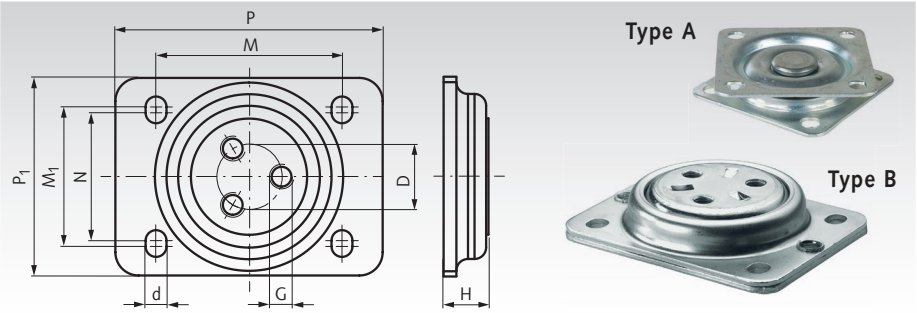

Ordering Details: e.g.: Product No. 77790301, Thrust ball bearing type A

Product No.	Type	D mm	d mm	H mm	P mm	P_1 mm	M mm	M_1 mm	N mm	G mm	Load capacity kg	Weight kg
777 903 01	A	60	6,5*	12	57	57	43	43	-	-	50	0,1
777 903 02	A	87,5	6,5*	17	95	70	75	45	-	-	280	0,3
777 903 03	B	28	9	19	105	85	80	60	53	M10	500	0,5
777 903 04	B	43	11	29	138	109	105	80	75	M12	600	1,2

* No oblong hole, hole with Ø d.

Single-Strand Roller Chains GT4 Winner DIN ISO 606 (formerly DIN 8187), Premium

Materials: Special chain steels.

Premium simplex roller chains, developed for low wear. Produced in consistently high quality. From size 08 with seamless bushes. From size 16 with lube groove bushes. Sizes 08 to 16 with centre sink riveting. Dynamically prestretched. Waisted link plates (size 06 with straight link plates). Chains are supplied with an uneven number of links, with inner links at both ends. Connecting links with ring coin plate for higher strength.

Temperature range: -10°C to +60°C.
Other temperatures are possible if special grease is used.

Ordering Details: e.g.: Product No. 10080000W, Roller Chain GT4 Winner 05 B-1

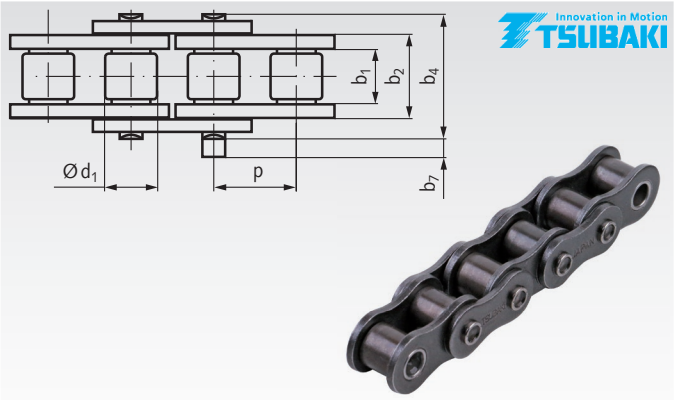

DIN ISO-No.	Product No.	Pitch x Inner Width p x b_{1min} mm			inch	Inner Width b_2 mm	Roller-Ø d_1 mm	Pin Ø mm	Width over Pin b_4 mm	Projection over Link b_7 [3] mm	Breaking Load min. kN	Weight kg/m
05 B-1	**100 800 00W**	8,0	x	3,0	-	4,77	5,00	2,30	8,6	3,1	5	0,18
06 B-1 [1]	**101 000 00W**	9,525	x	5,72	3/8 x 7/32	8,53	6,35	3,27	13,5	3,3	9	0,39
08 B-1	**105 000 00W**	12,7	x	7,75	1/2 x 5/16	11,30	8,51	4,45	17,0	3,9	19	0,70
10 B-1	**106 000 00W**	15,875	x	9,65	5/8 x 3/8	13,28	10,16	5,08	19,6	4,1	23	0,95
12 B-1	**107 000 00W**	19,05	x	11,68	3/4 x 7/16	15,62	12,07	5,72	22,7	4,6	31	1,25
16 B-1 [2]	**108 000 00W**	25,4	x	17,02	1" x 17,02mm	25,45	15,88	8,28	36,1	5,4	70	2,70
20 B-1 [2]	**109 000 00W**	31,75	x	19,56	1 1/4 x 3/4	29,01	19,05	10,19	43,2	6,1	98	3,85
24 B-1 [2]	**110 000 00W**	38,1	x	25,4	1 1/2 x 1	37,92	25,40	14,63	53,4	6,6	167	7,45

[1] With straight links plates.
[2] With lubrication groove bushes.
[3] Maximum values at the connecting link.

Please note: Packing Unit 5m with 1 Connecting Link
If special lengths are needed, please tell us the length and the number of links (uneven number!). At all special lengths, connecting links have to be ordered separately.

Connecting Links for Single-Strand Roller Chains GT4 Winner DIN ISO 606 (formerly DIN 8187), Premium

Materials: Special chain steels.
Ordering Details: e.g.: Product No. 10080300W, Connecting Link No. 11/E, GT4, 05 B-1

No. 11/E: Connecting Link with Spring Clip

No. 10/S: Connecting Link with Cottered Pin

No. 12/L: Cranked Link with Cottered Pin

No. 15/C: Cranked Double Link

DIN ISO No.	Product No. Connecting Link No. 11/E	Weight g	Product No. Connecting Link No. 10/S	Weight g	Product No. Cranked Link No. 12/L [1]	Weight g	Product No. Cranked Double No. 15/C [1]	Weight g
05 B-1	**100 803 00W**	2	**-**	-	**-**	-	**100 805 00W**	2
06 B-1	**101 003 00W**	4	**101 002 00W**	4	**101 004 00W**	4	**101 005 00W**	9
08 B-1	**105 003 00W**	9	**105 002 00W**	9	**105 004 00W**	9	**105 005 00W**	18
10 B-1	**106 003 00W**	13	**106 002 00W**	12	**106 004 00W**	15	**106 005 00W**	31
12 B-1	**107 003 00W**	21	**107 002 00W**	21	**107 004 00W**	24	**107 005 00W**	48
16 B-1	**108 003 00W**	66	**108 002 00W**	64	**108 004 00W**	80	**108 005 00W**	140
20 B-1	**-**	-	**109 002 00W**	108	**109 004 00W**	145	**109 005 00W**	279
24 B-1	**-**	-	**110 002 00W**	286	**110 004 00W**	293	**110 005 00W**	580

[1] With cranked links power and breaking load are reduced by 20%.

Single-Strand Roller Chains Lambda DIN ISO 606 (formerly DIN 8187), Self-Lubricating, Premium

Materials: Special chain steels, sinter metal bushes.

Self-lubricating single-strand roller chain in premium quality. Seamless sinter metal bushes, filled with NSF-H1 high-performance lubricate. Special treated pins. Sizes 08 to 16 with centre sink riveting. Dynamically prestretched.
Waisted link plates. Chains are supplied with an uneven number of links, with inner links at both ends. Connecting links with ring coin plate for higher strength.

Temperature range: -10° to +150°C.

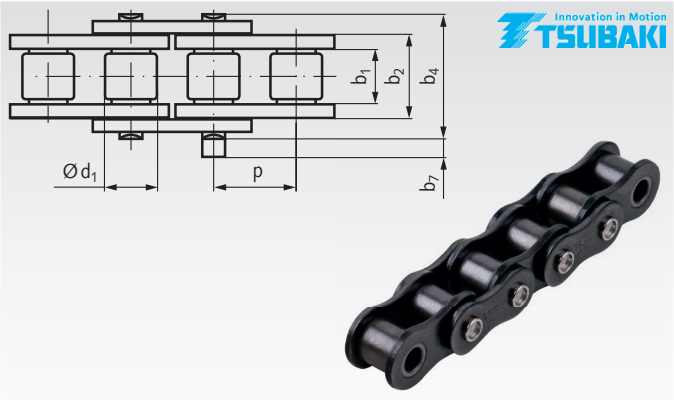

Ordering Details: e.g.: Product No. 10177000W, Roller Chain Lambda 06 B-1

DIN ISO-No.	Product No.	Pitch x Inner Width p x b_{1min} mm			inch	Inner Width b_2 mm	Roller-Ø d_1 mm	Pin Ø mm	Width over Pin b_4 mm	Projection over Link b_7 [2] mm	Breaking Load min. kN	Weight kg/m
06 B-1 [1]	**101 770 00L**	9,525	x	5,72	3/8 x 7/32	8,53	6,35	3,28	13,5	3,3	8,9	0,39
08 B-1	**105 770 00L**	12,7	x	7,75	1/2 x 5/16	11,30	8,51	4,45	17,0	3,9	17,8	0,70
10 B-1	**106 770 00L**	15,875	x	9,65	5/8 x 3/8	13,28	10,16	5,08	19,6	4,1	22,2	0,95
12 B-1	**107 770 00L**	19,05	x	11,68	3/4 x 7/16	15,62	12,07	5,72	22,7	4,6	28,9	1,25
16 B-1	**108 770 00L**	25,4	x	17,02	1" x 17,02mm	25,45	15,88	8,28	36,1	5,4	60,0	2,70
20 B-1	**109 770 00L**	31,75	x	19,56	1 1/4 x 3/4	29,01	19,05	10,19	43,2	6,1	95,0	3,85
24 B-1	**110 770 00L**	38,1	x	25,4	1 1/2 x 1	37,92	25,40	14,63	53,4	6,6	160,0	7,45

[1] With straight links plates.
[2] Maximum values at the connecting link.

Please note: Packing Unit 5m with 1 Connecting Link
If special lengths are needed, please tell us the length and the number of links (uneven number!). At all special lengths, connecting links have to be ordered separately.

Connecting Links for Single-Strand Roller Chains Lambda DIN ISO 606 (formerly DIN 8187), Premium

Materials: Special chain steels.

Ordering Details: e.g.: Product No. 10177003L, Connecting Link No. 11/E, Lambda 06 B-1

No. 11/E: Connecting Link with Spring Clip

No. 10/S: Connecting Link with Cottered Pin

No. 12/L: Cranked Link with Cottered Pin

No. 15/C: Cranked Double Link

DIN ISO No.	Product No. Connecting Link No. 11/E	Weight g	Product No. Connecting Link No. 10/S	Weight g	Product No. Cranked Link No. 12/L [1]	Weight g	Product No. Cranked Double No. 15/C [1]	Weight g
06 B-1	**101 770 03L**	4	**-**	-	**101 770 04L**	4	**101 770 05L**	9
08 B-1	**105 770 03L**	9	**-**	-	**105 770 04L**	9	**105 770 05L**	18
10 B-1	**106 770 03L**	13	**-**	-	**106 770 04L**	15	**106 770 05L**	31
12 B-1	**107 770 03L**	21	**-**	-	**107 770 04L**	24	**107 770 05L**	48
16 B-1	**108 770 03L**	66	**-**	-	**108 770 04L**	80	**108 770 05L**	140
20 B-1	**-**	-	**109 770 02L**	108	**109 770 04L**	145	**109 770 05L**	279
24 B-1	**-**	-	**110 770 02L**	286	**110 770 04L**	293	**110 770 05L**	580

[1] With cranked links power and breaking load are reduced by 20%.

Single-Strand Roller Chains Neptune™ DIN ISO 606 (formerly DIN 8187), Corrosion Proof

Materials: Special chain steel, with corrosion protection coating.

Premium single-strand roller chains with good corrosion resistance, but still highly loadable. Plates, bushes, pins and rollers with high-resiliant coating against moisture and alkaline cleaning agents. Sizes 08 to 16 with centre sink riveting. Performance and dimensions according to DIN. Dynamically prestretched. Wasted link plates (size 06 with straight link plates). Chains are supplied with an uneven number of links, with inner links at both ends.

Temperature range: -10°C to +60°C.
Wider temperature range -10°C to +230°C on request.

Ordering Details: e.g.: Product No. 10166000N, Roller Chain Neptune 06 B-1

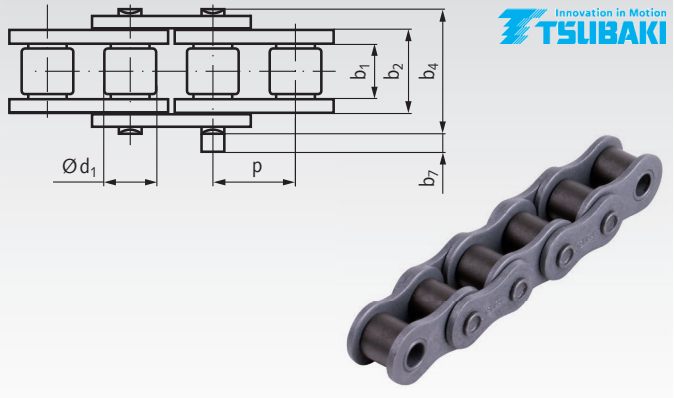

DIN ISO-No.	Product No.	Pitch x Inner Width p x b_{1min} mm			inch	Inner Width b_2 mm	Roller-Ø d_1 mm	Pin Ø mm	Width over Pin b_4 mm	Projection over Link b_7 [2] mm	Breaking Load min. kN	Weight kg/m
06 B-1 [1]	**101 660 00N**	9,525	x	5,72	3/8 x 7/32	8,53	6,35	3,28	13,5	3,3	9	0,39
08 B-1	**105 660 00N**	12,7	x	7,75	1/2 x 5/16	11,30	8,51	4,45	17,0	3,9	19	0,70
10 B-1	**106 660 00N**	15,875	x	9,65	5/8 x 3/8	13,28	10,16	5,08	19,6	4,1	23	0,95
12 B-1	**107 660 00N**	19,05	x	11,68	3/4 x 7/16	15,62	12,07	5,72	22,7	4,6	31	1,25
16 B-1	**108 660 00N**	25,4	x	17,02	1" x 17,02mm	25,45	15,88	8,28	36,1	5,4	70	2,70
20 B-1	**109 660 00N**	31,75	x	19,56	1 1/4 x 3/4	29,01	19,05	10,19	43,2	6,1	98	3,85
24 B-1	**110 660 00N**	38,1	x	25,4	1 1/2 x 1	37,92	25,40	14,63	53,4	6,6	167	7,45

[1] With straight link plates.
[2] Maximum values at the connecting link.

Please note: Packing Unit 5m with 1 Connecting Link
If special lengths are needed, please tell us the length and the number of links (uneven number!). At all special lengths, connecting links have to be ordered separately.

Connecting Links for Single-Strand Roller Chains Neptune™ DIN ISO 606 (formerly DIN 8187), Corrosion Proof

Materials: Special chain steel, with corrosion protection coating.

Ordering Details: e.g.: Product No. 10166003N, Connecting Link No.11/E, Neptune 06 B-1

No. 11/E: Connecting Link with Spring Clip

No. 10/S: Connecting Link with Cottered Pin

No. 12/L: Cranked Link with Cottered Pin

No. 15/C: Cranked Double Link

DIN ISO No.	Product No. Connecting Link No. 11/E	Weight g	Product No. Connecting Link No. 10/S	Weight g	Product No. Cranked No. 12/L [1]	Weight g	Product No. Cranked Double No. 15/C [1]	Weight g
06 B-1	**101 660 03N**	4	-	-	**101 660 04N**	4	**101 660 05N**	9
08 B-1	**105 660 03N**	7	-	-	**105 660 04N**	10	**105 660 05N**	18
10 B-1	**106 660 03N**	13	-	-	**106 660 04N**	15	**106 660 05N**	31
12 B-1	**107 660 03N**	14	-	-	**107 660 04N**	25	**107 660 05N**	48
16 B-1	**108 660 03N**	65	-	-	**108 660 04N**	81	**108 660 05N**	140
20 B-1	-	-	**109 660 02N**	115	**109 660 04N**	145	**109 660 05N**	279
24 B-1	-	-	**110 660 02N**	286	**110 660 04N**	293	**110 660 05N**	580

[1] With cranked links power and breaking loads are reduced by 20%.

Single-Strand Roller Chains Lambda-Neptune™ DIN ISO 606 (formerly DIN 8187), Self-Lubricating, Corrosion Proof

Materials: Special chain steel, with corrosion protection coating.

Self-lubricating single-strand roller chains in premium quality with good corrosion resistance. Seamless sinter metal bushes, filled with NSF-H1 high-performance lubricate. Plates, bushes, pins and rollers with high-resiliant coating against moisture and alkaline cleaning agents. Sizes 08 to 16 with centre sink riveting. Performance and dimensions according to DIN. Dynamically prestretched. Wasted link plates (size 06 with straight link plates). Chains are supplied with an uneven number of links, with inner links at both ends.

Temperature range: -10°C to +60°C.
Wider temperature range -10°C to +230°C on request.

Ordering Details: e.g.: Product No. 10176000LN, Roller Chain Lambda-Neptune 06 B-1

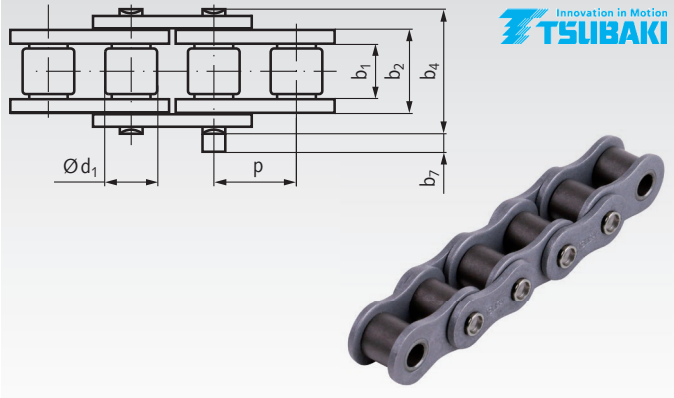

DIN ISO-No.	Product No.	Pitch x Inner Width p x b_{1min} mm			inch	Inner Width b_2 mm	Roller-Ø d_1 mm	Pin Ø mm	Width over Pin b_4 mm	Projection over Link b_7 [2] mm	Breaking Load min. kN	Weight kg/m
06 B-1 [1]	**101 760 00LN**	9,525	x	5,72	3/8 x 7/32	8,53	6,35	3,28	13,5	3,3	8,9	0,39
08 B-1	**105 760 00LN**	12,7	x	7,75	1/2 x 5/16	11,30	8,51	4,45	17,0	3,9	17,8	0,70
10 B-1	**106 760 00LN**	15,875	x	9,65	5/8 x 3/8	13,28	10,16	5,08	19,6	4,1	22,2	0,95
12 B-1	**107 760 00LN**	19,05	x	11,68	3/4 x 7/16	15,62	12,07	5,72	22,7	4,6	28,9	1,25
16 B-1	**108 760 00LN**	25,4	x	17,02	1" x 17,02mm	25,45	15,88	8,28	36,1	5,4	60,0	2,70
20 B-1	**109 760 00LN**	31,75	x	19,56	1 1/4 x 3/4	29,01	19,05	10,19	43,2	6,1	95,0	3,85
24 B-1	**110 760 00LN**	38,1	x	25,4	1 1/2 x 1	37,92	25,40	14,63	53,4	6,6	160,0	7,45

[1] With straight link plates.
[2] Maximum values at the connecting link.

Please note: Packing Unit 5m with 1 Connecting Link
If special lengths are needed, please tell us the length and the number of links (uneven number!). At all special lengths, connecting links have to be ordered separately.

Connecting Links for Single-Strand Roller Chains Lambda-Neptune™ DIN ISO 606, Self-Lubricating, Corrosion Proof

Materials: Special chain steel, with corrosion protection coating.

Ordering Details: e.g.: Product No. 10176003LN, Connecting Link No.11/E, Lambda-Neptune 06 B-1

No. 11/E: Connecting Link with Spring Clip

No. 10/S: Connecting Link with Cottered Pin

No. 12/L: Cranked Link with Cottered Pin

No. 15/C: Cranked Double Link

DIN ISO No.	Product No. Connecting Link No. 11/E	Weight g	Product No. Connecting Link No. 10/S	Weight g	Product No. Cranked No. 12/L [1]	Weight g	Product No. Cranked Double No. 15/C [1]	Weight g
06 B-1	**101 760 03LN**	4	-	-	**101 760 04LN**	4	**101 760 05LN**	9
08 B-1	**105 760 03LN**	7	-	-	**105 760 04LN**	10	**105 760 05LN**	18
10 B-1	**106 760 03LN**	13	-	-	**106 760 04LN**	15	**106 760 05LN**	31
12 B-1	**107 760 03LN**	14	-	-	**107 760 04LN**	25	**107 760 05LN**	48
16 B-1	**108 760 03LN**	65	-	-	**108 760 04LN**	81	**108 760 05LN**	140
20 B-1	-	-	**109 760 02LN**	115	**109 760 04LN**	145	**109 760 05LN**	279
24 B-1	-	-	**110 760 02LN**	286	**110 760 04LN**	293	**110 760 05LN**	580

[1] With cranked links power and breaking loads are reduced by 20%.

Single-Strand Roller Chains Similar to DIN ISO 606 (formerly DIN 8187), Stainless Steel, Premium

Material: Stainless steel, equivalent 1.4301 (AISI 304).
Cold forged, with minimal magnetism.

Premium simplex roller chains with high chemical resistance. Produced in consistently high quality. Main dimensions according to DIN. Due to the material properties, the transmittable power and breaking load are below the DIN values. The work load should not be higher than stated. Not lubricated. The chains must be lubricated according to the type of application. Waisted link plates (size 06 with straight link plates). Chains are supplied with an uneven number of links, with inner links at both ends.

Temperature range: -20°C to +400°C.

Ordering Details: e.g.: Product No. 10199000P, Roller Chain Stainless, Premium, 06 B-1

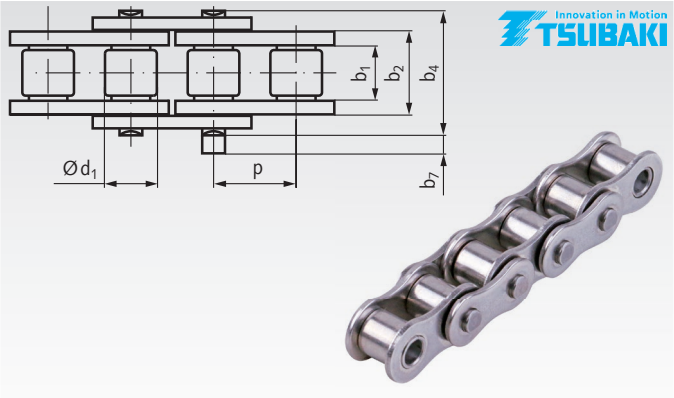

DIN ISO-No.	Product No.	Pitch x Inner Width p x b_{1min} mm			inch	Inner Width b_2 mm	Roller-Ø d_1 mm	Pin Ø mm	Width over Pin b_4 mm	Projection over Link b_7 [2] mm	Work load min. kN	Weight kg/m
06 B-1 [1]	**101 990 00P**	9,525	x	5,72	3/8 x 7/32	8,53	6,35	3,28	13,5	3,3	0,27	0,39
08 B-1	**105 990 00P**	12,7	x	7,75	1/2 x 5/16	11,30	8,51	4,45	17,0	3,9	0,48	0,70
10 B-1	**106 990 00P**	15,875	x	9,65	5/8 x 3/8	13,28	10,16	5,08	19,6	4,1	0,66	0,95
12 B-1	**107 990 00P**	19,05	x	11,68	3/4 x 7/16	15,62	12,07	5,72	22,7	4,6	0,87	1,25
16 B-1	**108 990 00P**	25,4	x	17,02	1" x 17,02mm	25,45	15,88	8,28	36,1	5,4	2,06	2,70

[1] With straight link plates.
[2] Maximum values at the connecting link.

Please note: Packing Unit 5m with 1 Connecting Link
If special lengths are needed, please tell us the length and the number of links (uneven number!). At all special lengths, connecting links have to be ordered separately.

Connecting Links for Single-Strand Roller Chains Similar to DIN ISO 606 (formerly DIN 8187), Stainless Steel, Premium

Material: Stainless steel, equivalent 1.4301 (AISI 304). Cold forged, with minimal magnetism.

Ordering Details: e.g.: Product No. 10199003P, Connecting Link No. 11/E, Stainless Steel, Premium, 06 B-1

No. 11/E: Connecting Link with Spring Clip

No. 10/S: Connecting Link with Cottered Pin

No. 12/L: Cranked Link with Cottered Pin

No. 15/C: Cranked Double Link

DIN ISO No.	Product No. Connecting Link No. 11/E	Weight g	Product No. Connecting Link No. 10/S	Weight g	Product No. Cranked No. 12/L [1]	Weight g	Product No. Cranked Double No. 15/C [1]	Weight g
06 B-1	**101 990 03P**	4	-	-	**101 990 04P**	4	**101 990 05P**	9
08 B-1	**105 990 03P**	7	-	-	**105 990 04P**	10	**105 990 05P**	18
10 B-1	**106 990 03P**	13	-	-	**106 990 04P**	15	**106 990 05P**	31
12 B-1	**107 990 03P**	14	**107 990 02P**	21	**107 990 04P**	25	**107 990 05P**	48
16 B-1	**108 990 03P**	65	**108 990 02P**	65	**108 990 04P**	81	**108 990 05P**	140

[1] With cranked links, power and breaking load are reduced by 20%.

Single-Strand Roller Chains Titan DIN ISO 606 (formerly DIN 8187), for Abrasive Environment

Materials: Special chain steels. Outer plates nickel-plated. Inner plates black oxided.

Premium simplex roller chains, developed for low wear, even under dusty environment. Seamless bushes with lube grooves. Specially hard, low friction pins. Dynamically prestretched. Waisted link plates (size 06 with straight link plates). Chains are supplied with an uneven number of links, with inner links at both ends. Connecting links with ring coin plate for higher strength.

Temperature range: -10°C to +60°C.
Other temperatures are possible if special grease is used.

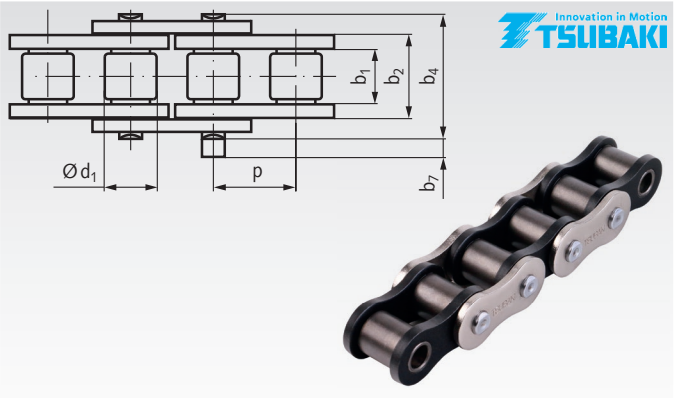

Ordering Details: e.g.: Product No. 10800000T, Roller Chain 16 B-1, Titan

DIN ISO-No.	Product No.	Pitch x Inner Width $p \times b_{1min}$ mm			inch	Inner Width b_2 mm	Roller-Ø d_1 mm	Pin Ø mm	Width over Pin b_4 mm	Projection over Link b_7 [1] mm	Breaking Load min. kN	Weight kg/m
16 B-1	**108 000 00T**	25,4	x	17,02	1" x 17,02mm	25,45	15,88	8,28	36,1	5,4	70	2,70
20 B-1	**109 000 00T**	31,75	x	19,56	1 1/4 x 3/4	29,01	19,05	10,19	43,2	6,1	98	3,85
24 B-1	**110 000 00T**	38,1	x	25,4	1 1/2 x 1	37,92	25,40	14,63	53,4	6,6	167	7,45

[1] Maximum values at the connecting link.

Please note: Packing Unit 5m with 1 Connecting Link
If special lengths are needed, please tell us the length and the number of links (uneven number!). At all special lengths, connecting links have to be ordered separately.

Connecting Links for Single-Strand Roller Chains Titan DIN ISO 606 (formerly DIN 8187)

Materials: Special chain steels.
Ordering Details: e.g.: Product No. 10800300T, Connecting Link No. 11/E, Titan, 16 B-1

No. 11/E: Connecting Link with Spring Clip

No. 10/S: Connecting Link with Cottered Pin

No. 12/L: Cranked Link with Cottered Pin

DIN ISO No.	Product No. Connecting Link No. 11/E	Weight g	Product No. Connecting Link No. 10/S	Weight g	Product No. Cranked Link No. 12/L [1]	Weight g
16 B-1	**108 003 00T**	66	**-**	-	**108 004 00T**	80
20 B-1	**-**	-	**109 002 00T**	108	**109 004 00T**	145
24 B-1	**-**	-	**110 002 00T**	286	**110 004 00T**	293

[1] With cranked links power and breaking load are reduced by 20%.

Double-Strand Roller Chains GT4 Winner DIN ISO 606 (formerly DIN 8187), Premium

Materials: Special chain steels.

Premium duplex roller chains, developed for low wear. Produced in consistently high quality. From size 08 with seamless bushes. From size 16 with lube groove bushes. Dynamically prestretched. Waisted link plates (size 06 with straight link plates). Chains are supplied with an uneven number of links, with inner links at both ends. Connecting links with ring coin plate for higher strength.

Temperature range: -10°C to +60°C.
Other temperatures are possible if special grease is used.

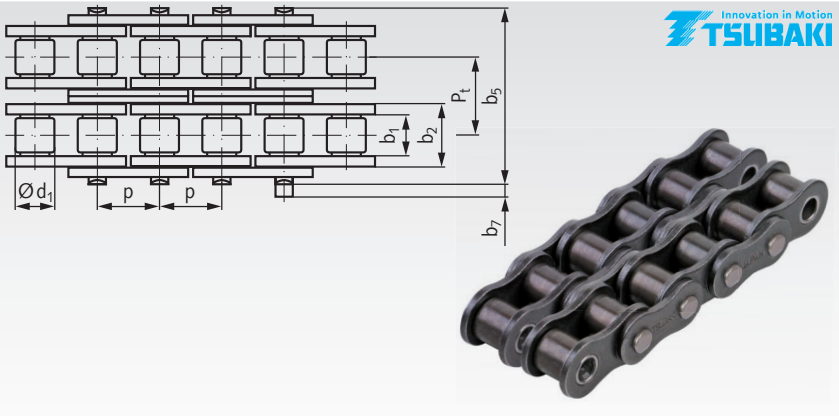

Ordering Details: e.g.: Product No. 12000000W, Double-Strand Roller Chain GT4 Winner, 05 B-2

DIN ISO-No.	Product No.	Pitch x Inner Width p x b_{1min} mm			inch	Inner Width b_2 mm	Roller-Ø d_1 mm	Width b_5 mm	Transverse Pitch P_t mm	Projection b_7 [3] mm	Breaking Load min. kN	Weight kg/m
05 B-2	**120 000 00W**	8,0	x	3,0	-	4,77	5,00	14,3	5,64	3,1	7,8	0,36
06 B-2 [1]	**121 000 00W** [1]	9,525	x	5,72	3/8 x 7/32	8,53	6,35	23,8	10,24	3,3	17	0,78
08 B-2	**125 000 00W**	12,7	x	7,75	1/2 x 5/16	11,30	8,51	31,0	13,92	3,9	32	1,36
10 B-2	**126 000 00W**	15,875	x	9,65	5/8 x 3/8	13,28	10,16	36,2	16,59	4,1	44,5	1,82
12 B-2	**127 000 00W**	19,05	x	11,68	3/4 x 7/16	15,62	12,07	42,2	19,46	4,6	61	2,38
16 B-2 [2]	**128 000 00W**	25,4	x	17,02	1" x 17,02mm	25,45	15,88	68,0	31,88	5,4	128	5,40
20 B-2 [2]	**129 000 00W**	31,75	x	19,56	1 1/4 x 3/4	29,01	19,05	79,7	36,45	6,1	197	7,20
24 B-2 [2]	**129 500 00W**	38,1	x	25,4	1 1/2 x 1	37,92	25,40	101,8	48,36	6,6	335	13,50

[1] With straight links plates.
[2] With lubrication groove bushes.
[3] Maximum values at the connecting link.

Please note: Packing Unit 5m with 1 Connecting Link
If special lengths are needed, please tell us the length and the number of links (uneven number!). At all special lengths, connecting links have to be ordered separately.

Connecting Links for Double-Strand Roller Chains GT4 Winner DIN ISO 606 (formerly DIN 8187), Premium

Materials: Special chain steels.

Ordering Details: e.g.: Product No. 12000300W, Connecting Link No. 11/E, GT4 Winner, 05 B-2

No. 11/E: Connecting Link with Spring Clip

No. 10/S: Connecting Link with Cottered Pin

No. 12/L: Cranked Link with Cottered Pin

No. 15/C: Cranked Double Link

DIN ISO No.	Product No. Connecting Link No. 11/E	Weight g	Product No. Connecting Link No. 10/S	Weight g	Product No. Cranked Link No. 12/L [1]	Weight g	Product No. Cranked Double No. 15/C [1]	Weight g
05 B-2	**120 003 00W**	2	**-**	-	**-**	-	**120 005 00W**	6
06 B-2	**121 003 00W**	7	**121 002 00W**	7	**-**	-	**121 005 00W**	15
08 B-2	**125 003 00W**	17	**125 002 00W**	17	**125 004 00W**	18	**125 005 00W**	38
10 B-2	**126 003 00W**	24	**126 002 00W**	24	**126 004 00W**	30	**126 005 00W**	62
12 B-2	**127 003 00W**	39	**127 002 00W**	39	**127 004 00W**	47	**127 005 00W**	99
16 B-2	**128 003 00W**	122	**128 002 00W**	122	**128 004 00W**	137	**128 005 00W**	183
20 B-2	**-**	-	**129 002 00W**	163	**129 004 00W**	183	**129 005 00W**	245
24 B-2	**-**	-	**129 502 00W**	305	**129 504 00W**	343	**129 505 00W**	458

[1] With cranked links power and breaking load are reduced by 20%.

Double-Strand Roller Chains Lambda DIN ISO 606 (formerly DIN 8187), Self-Lubricating, Premium

Materials: Special chain steels, sinter metal bushes.

Self-lubricating duplex-strand roller chains in premium quality. Seamless sinter metal bushes, filled with NSF-H1 high-performance lubricate. Special treated pins. Dynamically prestretched.
Waisted link plates (size 06 with straight link plates). Chains are supplied with an uneven number of links, with inner links at both ends. Connecting links with ring coin plate for higher strength.

Temperature range: -10° to +150°C.

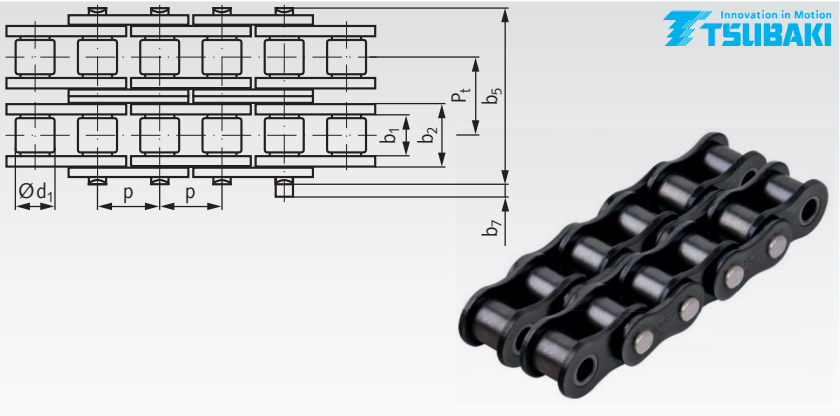

Ordering Details: e.g.: Product No. 12177000L, Double-Strand Roller Chain Lambda, 06 B-2

DIN ISO-No.	Product No.	Pitch x Inner Width p x b_{1min} mm			inch	Inner Width b_2 mm	Roller-Ø d_1 mm	Width b_5 mm	Transverse Pitch P_t mm	Projection b_7 [2] mm	Breaking Load min. kN	Weight kg/m
06 B-2 [1]	**121 770 00L** [1]	9,525	x	5,72	3/8 x 7/32	8,53	6,35	23,8	10,24	3,3	16,9	0,78
08 B-2	**125 770 00L**	12,7	x	7,75	1/2 x 5/16	11,30	8,51	31,0	13,92	3,9	31,1	1,36
10 B-2	**126 770 00L**	15,875	x	9,65	5/8 x 3/8	13,28	10,16	36,2	16,59	4,1	44,5	1,82
12 B-2	**127 770 00L**	19,05	x	11,68	3/4 x 7/16	15,62	12,07	42,2	19,46	4,6	57,8	2,38
16 B-2	**128 770 00L**	25,4	x	17,02	1" x 17,02mm	25,45	15,88	68,0	31,88	5,4	106,0	5,40
20 B-2	**129 770 00L**	31,75	x	19,56	1 1/4 x 3/4	29,01	19,05	79,7	36,45	6,1	170,0	7,20
24 B-2	**129 775 00L**	38,1	x	25,4	1 1/2 x 1	37,92	25,40	101,8	48,36	6,6	280,0	13,50

[1] With straight links plates.
[2] Maximum values at the connecting link.

Please note: Packing Unit 5m with 1 Connecting Link
If special lengths are needed, please tell us the length and the number of links (uneven number!). At all special lengths, connecting links have to be ordered separately.

Connecting Links for Double-Strand Roller Chains Lambda DIN ISO 606 (formerly DIN 8187), Premium

Materials: Special chain steels.

Ordering Details: e.g.: Product No. 12177003L, Connecting Link No. 11/E, Lambda, 06 B-2

No. 11/E: Connecting Link with Spring Clip

No. 10/S: Connecting Link with Cottered Pin

No. 12/L: Cranked Link with Cottered Pin

No. 15/C: Cranked Double Link

DIN ISO No.	Product No. Connecting Link No. 11/E	Weight g	Product No. Connecting Link No. 10/S	Weight g	Product No. Cranked Link No. 12/L [1]	Weight g	Product No. Cranked Double No. 15/C [1]	Weight g
06 B-2	**121 770 03L**	7	-	-	**121 770 04L**	7	**121 770 05L**	15
08 B-2	**125 770 03L**	17	-	-	**125 770 04L**	18	**125 770 05L**	38
10 B-2	**126 770 03L**	24	-	-	**126 770 04L**	30	**126 770 05L**	62
12 B-2	**127 770 03L**	39	-	-	**127 770 04L**	47	**127 770 05L**	99
16 B-2	**128 770 03L**	122	**128 770 02L**	122	**128 770 04L**	137	**128 770 05L**	183
20 B-2	-	-	**129 770 02L**	163	**129 770 04L**	183	**129 770 05L**	245
24 B-2	-	-	**129 775 02L**	305	**129 775 04L**	343	**129 775 05L**	458

[1] With cranked links power and breaking load are reduced by 20%.

Double-Strand Roller Chains Neptune™ DIN ISO 606 (formerly DIN 8187), Corrosion Proof

Materials: Special chain steel, with corrosion protection coating.

Premium duplex-strand roller chains with good corrosion resistance, but still highly loadable. Plates, bushes, pins and rollers with high-resiliant coating against moisture and alkaline cleaning agents. Performance and dimensions according to DIN. Dynamically prestretched. Wasted link plates (size 06 with straight link plates). Chains are supplied with an uneven number of links, with inner links at both ends.

Temperature range: -10°C to +60°C.
Wider temperature range -10°C to +230°C on request.

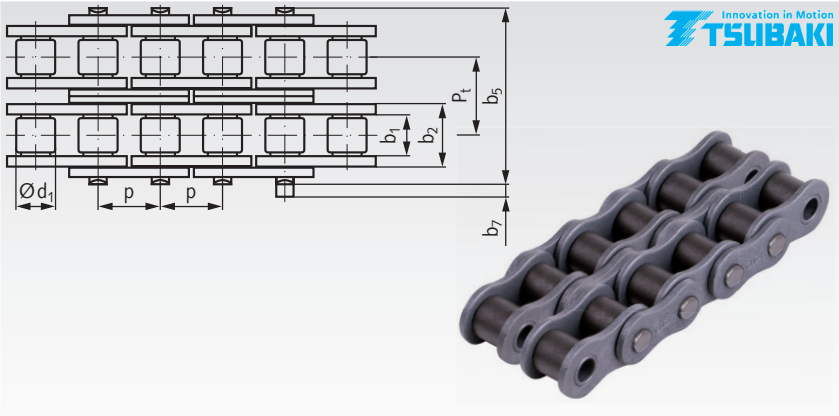

Ordering Details: e.g.: Product No. 12166000N, Double-Strand Roller Chain Neptune, 06 B-2

DIN ISO-No.	Product No.	Pitch x Inner Width p x b_{1min} mm			inch	Inner Width b_2 mm	Roller-Ø d_1 mm	Width b_5 mm	Transverse Pitch P_t mm	Projection b_7 [2] mm	Breaking Load min. kN	Weight kg/m
06 B-2 [1]	**121 660 00N** [1]	9,525	x	5,72	3/8 x 7/32	8,53	6,35	23,8	10,24	3,3	17	0,78
08 B-2	**125 660 00N**	12,7	x	7,75	1/2 x 5/16	11,30	8,51	31,0	13,92	3,9	32	1,36
10 B-2	**126 660 00N**	15,875	x	9,65	5/8 x 3/8	13,28	10,16	36,2	16,59	4,1	44,5	1,82
12 B-2	**127 660 00N**	19,05	x	11,68	3/4 x 7/16	15,62	12,07	42,2	19,46	4,6	61	2,38
16 B-2	**128 660 00N**	25,4	x	17,02	1" x 17,02mm	25,45	15,88	68,0	31,88	5,4	128	5,40
20 B-2	**129 660 00N**	31,75	x	19,56	1 1/4 x 3/4	29,01	19,05	79,7	36,45	6,1	197	7,20

[1] With straight link plates.
[2] Maximum values at the connecting link.

Please note: Packing Unit 5m with 1 Connecting Link
If special lengths are needed, please tell us the length and the number of links (uneven number!). At all special lengths, connecting links have to be ordered separately.

Connecting Links for Double-Strand Roller Chains Neptune™ DIN ISO 606 (formerly DIN 8187), Corrosion Proof

Materials: Special chain steel, with corrosion protection coating.

Ordering Details: e.g.: Product No. 12166003N, Connecting Link No.11/E, Neptune, 06 B-2

No. 11/E: Connecting Link with Spring Clip

No. 10/S: Connecting Link with Cottered Pin

No. 12/L: Cranked Link with Cottered Pin

No. 15/C: Cranked Double Link

DIN ISO No.	Product No. Connecting Link No. 11/E	Weight g	Product No. Connecting Link No. 10/S	Weight g	Product No. Cranked No. 12/L [1]	Weight g	Product No. Cranked Double No. 15/C [1]	Weight g
06 B-2	**121 660 03N**	7	-	-	**121 660 04N**	7	**121 660 05N**	15
08 B-2	**125 660 03N**	17	-	-	**125 660 04N**	18	**125 660 05N**	38
10 B-2	**126 660 03N**	24	-	-	**126 660 04N**	30	**126 660 05N**	62
12 B-2	**127 660 03N**	39	-	-	**127 660 04N**	47	**127 660 05N**	99
16 B-2	**128 660 03N**	122	-	-	**128 660 04N**	137	**128 660 05N**	183
20 B-2	-	-	**129 660 02N**	163	**129 660 04N**	183	-	-

[1] With cranked links power and breaking loads are reduced by 20%.

Double-Strand Roller Chains similar to DIN ISO 606 (formerly DIN 8187), Stainless Steel, Premium

Material: Stainless steel, equivalent 1.4301 (AISI 304). Cold forged, with minimal magnetism.

STAINLESS

Premium duplex roller chains with high chemical resistance. Produced in consistently high quality. Main dimensions according to DIN. Due to the material properties, the transmittable power and breaking load are below the DIN values. The work load should not be higher than stated. Not lubricated. The chains must be lubricated according to the type of application. Waisted link plates (size 06 with straight link plates). Chains are supplied with an uneven number of links, with inner links at both ends.

Temperature range: -20°C to +400°C.

Ordering Details: e.g.: Product No. 12199000P, Double-Strand Roller Chain 06 B-2, stainless, premium

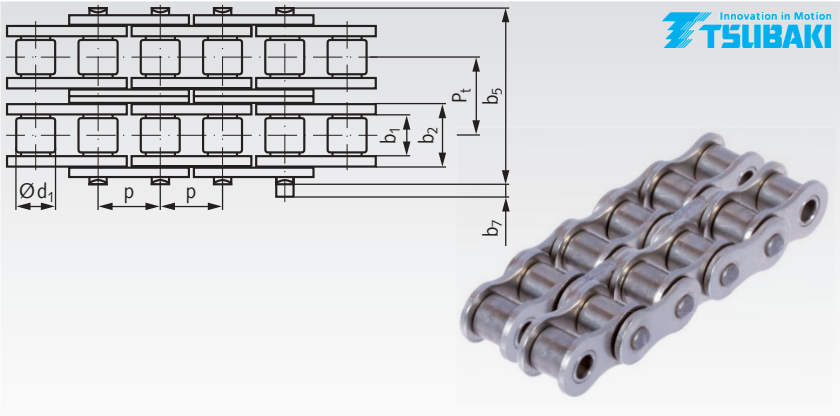

DIN ISO-No.	Product No.	Pitch x Inner Width p x b_{1min} mm			inch	Inner Width b_2 mm	Roller-Ø d_1 mm	Width b_5 mm	Transverse Pitch P_t mm	Projection b_7 mm	Work load max. kN	Weight kg/m
06 B-2 [1]	**121 990 00P** [1]	9,525	x	5,72	3/8 x 7/32	8,32	6,35	23,2	10,24	0,7	0,53	0,75
08 B-2	**125 990 00P**	12,7	x	7,75	1/2 x 5/16	10,75	8,51	30,6	13,92	1,7	0,96	1,35
10 B-2	**126 990 00P**	15,875	x	9,65	5/8 x 3/8	12,65	10,16	35,7	16,59	1,7	1,32	1,85
12 B-2	**127 990 00P**	19,05	x	11,68	3/4 x 7/16	15,28	12,07	41,8	19,46	1,8	1,74	2,50
16 B-2	**128 990 00P**	25,4	x	17,02	1“ x 17,02mm	25,02	15,88	67,1	31,88	2,2	4,12	5,40

[1] With straight link plates.

Please note: Packing Unit 5m with 1 Connecting Link
If special lengths are needed, please tell us the length and the number of links (uneven number!). At all special lengths, connecting links have to be ordered separately.

Connecting Links for Double-Strand Roller Chains similar to DIN ISO 606 (formerly DIN 8187), Stainless Steel, Premium

Material: Stainless steel 1.4301 (AISI 304).

Ordering Details: e.g.: Product No. 12199003P, Connecting Link No. 11/E, 06 B-2, stainless, premium

Innovation in Motion TSUBAKI

STAINLESS

No. 11/E: Connecting Link with Spring Clip

DIN ISO No.	Product No. Conn. Link No. 11/E	Weight g
06 B-2	**121 990 03P**	7
08 B-2	**125 990 03P**	17
10 B-2	**126 990 03P**	24
12 B-2	**127 990 03P**	39
16 B-2	**128 990 03P**	122

Triple-Strand Roller Chains GT4 Winner DIN ISO 606 (formerly DIN 8187), Premium

Materials: Special chain steels.

Premium triplex roller chains, developed for low wear. Produced in consistently high quality. From size 08 with seamless bushes. From size 16 with lube groove bushes. Dynamically prestretched. Waisted link plates (size 06 with straight link plates). Chains are supplied with an uneven number of links, with inner links at both ends. Connecting links with ring coin plate for higher strength.

Temperature range: -10°C to +60°C.
Other temperatures are possible if special grease is used.

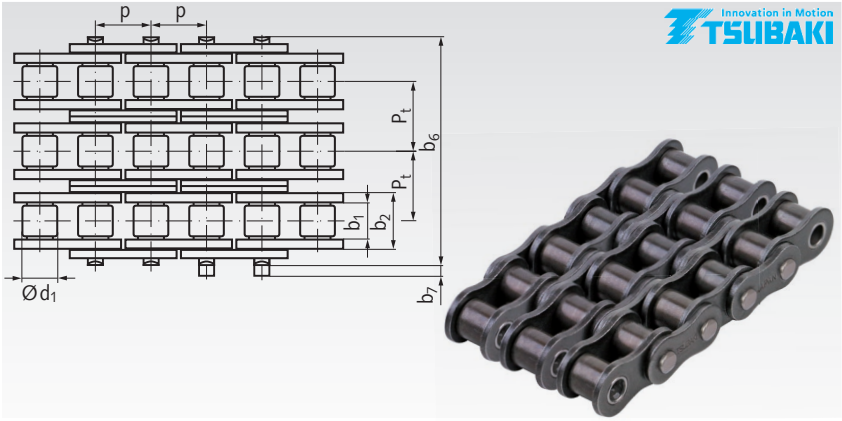

Ordering Details: e.g.: Product No. 13100000W, Triple-Strand Roller Chain GT4 Winner, 06 B-3

DIN ISO-No.	Product No.	Pitch x Inner Width $p \times b_{1min}$ mm			inch	Inner Width b_2 mm	Roller-Ø d_1 mm	Width b_6 mm	Transverse Pitch P_t mm	Projection b_7 [3] mm	Breaking Load min. kN	Weight kg/m
06 B-3 [1]	**131 000 00W** [1]	9,525	x	5,72	3/8 x 7/32	8,53	6,35	34,4	10,24	3,3	24,9	1,11
08 B-3	**135 000 00W**	12,7	x	7,75	1/2 x 5/16	11,30	8,51	44,9	13,92	3,9	44,5	2,0
10 B-3	**136 000 00W**	15,875	x	9,65	5/8 x 3/8	13,28	10,16	52,8	16,59	4,1	66,7	2,8
12 B-3	**137 000 00W**	19,05	x	11,68	3/4 x 7/16	15,62	12,07	61,7	19,46	4,6	86,7	3,8
16 B-3 [2]	**138 000 00W** [2]	25,4	x	17,02	1" x 17,02mm	25,45	15,88	99,9	31,88	5,4	192,0	8,0

[1] With straight links plates.
[2] With lubrication groove bushes.
[3] Maximum values at the connecting link.

Please note: Packing Unit 5m with 1 Connecting Link
If special lengths are needed, please tell us the length and the number of links (uneven number!). At all special lengths, connecting links have to be ordered separately.

Connecting Links for Triple-Strand Roller Chains GT4 Winner DIN ISO 606 (formerly DIN 8187), Premium

Materials: Special chain steels.

Ordering Details: e.g.: Product No. 13100300W, Connecting Link No. 11/E, GT4 Winner, 06 B-3

No. 11/E: Connecting Link with Spring Clip

No. 10/S: Connecting Link with Cottered Pin

No. 12/L: Cranked Link with Cottered Pin

DIN ISO No.	Product No. Connecting Link No. 11/E	Weight g	Product No. Connecting Link No. 10/S	Weight g	Product No. Cranked Link No. 12/L [1]	Weight g
06 B-3	**131 003 00W**	9	**131 002 00W**	9	-	-
08 B-3	**135 003 00W**	26	**135 002 00W**	26	**135 004 00W**	27
10 B-3	**136 003 00W**	36	**136 002 00W**	36	**136 004 00W**	45
12 B-3	**137 003 00W**	60	**137 002 00W**	60	**137 004 00W**	71
16 B-3	**138 003 00W**	183	**138 002 00W**	183	**138 004 00W**	210

[1] With cranked links, power and breaking load are reduced by 20%.

Single-Strand Roller Chains ANSI DIN ISO 606 (formerly DIN 8188), Premium

Materials: Special chain steels.

Premium simplex roller chains, developed for low wear. Produced in consistently high quality. From size 40 with seamless bushes. From size 80 with lube groove bushes. Waisted link plates. Dynamically prestretched. Chains are supplied with an uneven number of links, with inner links at both ends. Connecting links with ring coin plate for higher strength.

Temperature range: -10°C to +60°C.
Other temperatures are possible if special grease is used.

Ordering Details: e.g.: Product No. A10060000W, Roller Chain ANSI 25-1, Premium

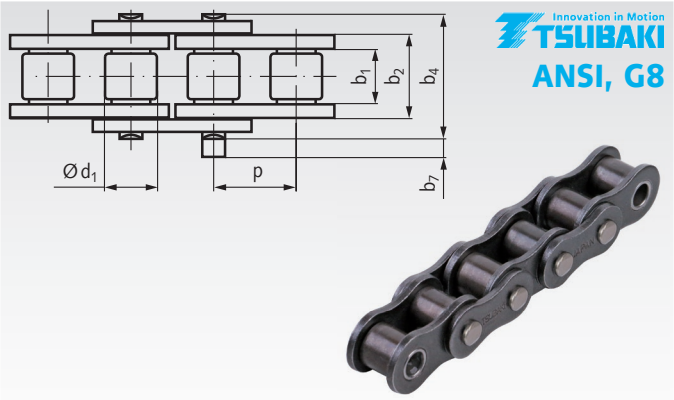

ANSI / DIN ISO-No. (ASA)	Product No.	Pitch x Inner Width p x b_{1min} mm			p inch	Inner Width b_2 mm	Roller-Ø d_1 mm	Pin Ø mm	Width over Pin b_4 mm	Projection over Link b_7 mm	Breaking Load min. kN	Weight kg/m
25-1 [1] (04C-1)	**A100 600 00W** [1]	6,35	x	3,10	1/4	4,68	3,3	2,31	7,6	0,7	4,12	0,14
35-1 [1] (06C-1)	**A101 000 00W** [1]	9,525	x	4,68	3/8	7,28	5,08	3,59	11,7	1,0	9,81	0,33
40-1 (08A-1)	**A105 000 00W**	12,7	x	7,85	1/2	10,95	7,92	3,97	16,5	1,7	17,7	0,64
50-1 (10A-1)	**A106 000 00W**	15,875	x	9,40	5/8	13,53	10,16	5,09	20,6	1,6	28,4	1,04
60-1 (12A-1)	**A107 000 00W**	19,05	x	12,57	3/4	17,5	11,91	5,96	25,7	1,9	40,2	1,53
80-1 [2] (16A-1)	**A108 000 00W** [2]	25,4	x	15,75	1	22,6	15,88	7,94	32,5	3,0	71,6	2,66

[1] Bush chain (without rollers).
[2] With lubrication groove bushes.

Please note: Packing Unit 3.05m with 1 Connecting Link
If special lengths are needed, please tell us the length and the number of links (uneven number!). At all special lengths, connecting links have to be ordered separately.

Connecting Links for Single-Strand Roller Chains ANSI DIN ISO 606 (formerly DIN 8188), Premium

Materials: Special chain steels.
Ordering Details: e.g.: Product No. A10060300W, Connecting Link No. 11/E, ANSI 25-1, Premium

Innovation in Motion
TSUBAKI
ANSI, G8

No. 11/E: Connecting Link with Spring Clip

No. 10/S: Connecting Link with Cottered Pin

ANSI / DIN ISO No. (ASA)	Product No. Connecting Link No. 11/E	Weight g	Product No. Connecting Link No. 10/S	Weight g
25-1 (04C-1)	**A100 603 00W**	2	-	-
35-1 (06C-1)	**A101 003 00W**	4	-	-
40-1 (08A-1)	**A105 003 00W**	9	-	-
50-1 (10A-1)	**A106 003 00W**	13	-	-
60-1 (12A-1)	**A107 003 00W**	21	-	-
80-1 (16A-1)	-	-	**A108 002 00W**	64

Single-Strand Roller Chains ANSI Lambda DIN ISO 606 (formerly DIN 8188), Self-Lubricating, Premium

Materials: Special chain steels, sinter metal bushes.

Self-lubricating single-strand roller chain in premium quality. Sinter metal bushes, filled with NSF-H1 high-performance lubricate. Special treated pins. Dynamically prestretched. Waisted link plates. Chains are supplied with an uneven number of links, with inner links at both ends. Connecting links with ring coin plate for higher strength.

Temperature range: -10° to +150°C.

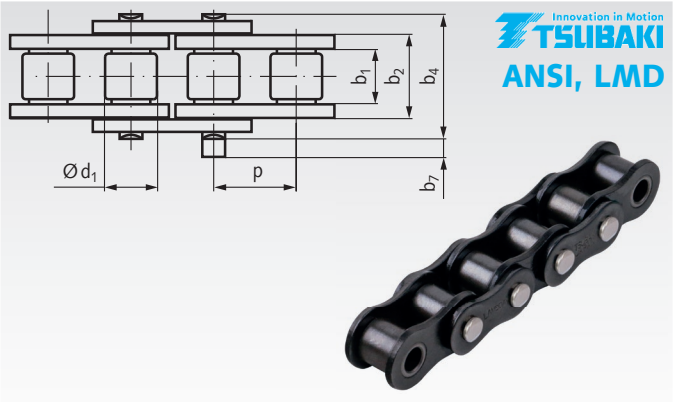

Ordering Details: e.g.: Product No. A10577000L, Roller Chain ANSI 40, Lambda-1

ANSI / DIN ISO-No. (ASA)	Product No.	Pitch x Inner Width p x b_{1min} mm			p inch	Inner Width b_2 [1] mm	Roller-Ø d_1 mm	Pin Ø mm	Width over Pin b_4 [2] mm	Projection over Link b_7 mm	Breaking Load min. kN	Weight kg/m
40-1 (08A-1)	**A105 770 00L**	12,7	x	7,55	1/2	11,55	7,92	3,97	17,5	1,7	17,7	0,70
50-1 (10A-1)	**A106 770 00L**	15,875	x	9,26	5/8	14,06	10,16	5,09	21,5	1,7	28,4	1,11
60-1 (12A-1)	**A107 770 00L**	19,05	x	12,28	3/4	18,68	11,91	5,96	27,4	2	40,2	1,72
80-1 (16A-1)	**A108 770 00L**	25,4	x	15,48	1	23,48	15,88	7,94	34,3	3,1	71,6	2,77

[1] Slightly wider than specified in the standard.
[2] Significantly wider than specified in the standard. For double chain wheels, their usability must be checked.

Please note: Packing Unit 3.05m with 1 Connecting Link
If special lengths are needed, please tell us the length and the number of links (uneven number!). At all special lengths, connecting links have to be ordered separately.

Connecting Links for Single-Strand Roller Chains ANSI Lambda DIN ISO 606 (formerly DIN 8188), Premium

Materials: Special chain steels.

Ordering Details: e.g.: Product No. A10577003L, Connecting Link No. 11/E, ANSI Lambda 40-1

Innovation in Motion TSUBAKI ANSI, LMD

No. 11/E: Connecting Link with Spring Clip

No. 10/S: Connecting Link with Cottered Pin

ANSI / DIN ISO No. (ASA)	Product No. Connecting Link No. 11/E	Weight g	Product No. Connecting Link No. 10/S	Weight g
40-1 (08A-1)	**A105 770 03L**	9	-	-
50-1 (10A-1)	**A106 770 03L**	13	-	-
60-1 (12A-1)	**A107 770 03L**	21	-	-
80-1 (16A-1)	-	-	**A108 770 02L**	66

Single-Strand Roller Chains similar to ANSI DIN ISO 606 (formerly DIN 8188), Stainless Steel, Premium

Material: Stainless steel, equivalent 1.4301 (AISI 304).
Cold forged, magnetism.

STAINLESS

Premium simplex roller chains with chemical resistance. Produced in consistently high quality. Main dimensions according to DIN ISO 606 (formerly DIN 8188). Due to the material properties, the transmittable power and breaking load are below the DIN values. The work load should not be higher than stated. Not lubricated. The chains must be lubricated according to the type of application. Waisted link plates. Chains are supplied with an uneven number of links, with inner links at both ends.

Temperature range: -20°C to +400°C.

Ordering Details: e.g.: Product No. A10099000P, Roller Chain, ANSI 11-1, stainless, premium

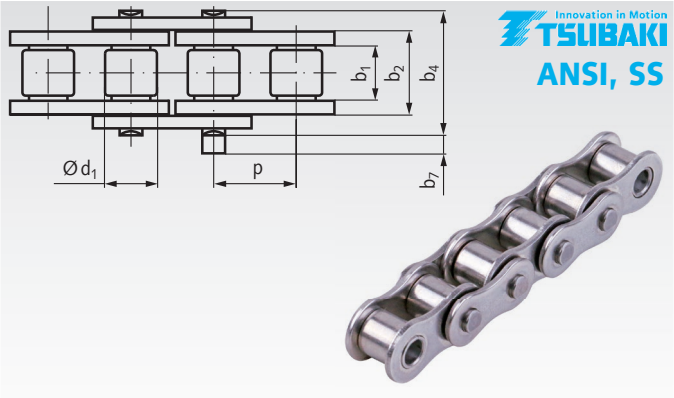

ANSI / DIN ISO-No. (ASA)	Product No.	Pitch x Inner Width p x b_{1min} mm			p inch	Inner Width b_2 mm	Roller-Ø d_1 mm	Pin Ø mm	Width over Pin b_4 mm	Projection over Link b_7 mm	Work load max. kN	Weight kg/m
11-1 [1) 2)] -	**A100 990 00P** [1) 2)]	3,7465	x	1,83	0,1475	2,59	2,285	1,57	4,55	0,9	0,05	0,052
25-1 [1)] (04C-1)	**A100 996 00P** [1)]	6,35	x	3,10	1/4	4,68	3,30	2,31	7,6	1,0	0,12	0,14
35-1 [1)] (06C-1)	**A101 990 00P** [1)]	9,525	x	4,68	3/8	7,28	5,08	3,59	12,1	0,8	0,26	0,33
40-1 (08A-1)	**A105 990 00P**	12,7	x	7,85	1/2	10,95	7,92	3,97	16,5	1,4	0,44	0,64
50-1 (10A-1)	**A106 990 00P**	15,875	x	9,40	5/8	13,53	10,16	5,09	20,6	1,7	0,69	1,04
60-1 (12A-1)	**A107 990 00P**	19,05	x	12,57	3/4	17,50	11,91	5,96	25,7	1,9	1,03	1,53
80-1 (16A-1)	**A108 990 00P**	25,4	x	15,75	1	22,28	15,88	7,94	32,5	3,2	1,77	2,66

[1)] Bush chain (without rollers).
[2)] This size is not part of the DIN.

Please note: Packing Unit 3.05m with 1 Connecting Link
If special lengths are needed, please tell us the length and the number of links (uneven number!). At all special lengths, connecting links have to be ordered separately.

Connecting Links for Single-Strand Roller Chains ANSI similar to DIN ISO 606 (formerly DIN 8188), Stainless Steel, Premium

Material: Stainless steel, equivalent 1.4301 (AISI 304). Cold forged, hardened pin, magnetic.

Ordering Details: e.g.: Product No. A10099003P, Connecting Link No. 11/E, ANSI 11-1, stainless, premium

STAINLESS

Innovation in Motion
TSUBAKI
ANSI, SS

No. 11/E: Connecting Link with Spring Clip

No. 10/S: Connecting Link with Cottered Pin

ANSI / DIN ISO No. (ASA)	Product No. Connecting Link No. 11/E	Weight g	Product No. Connecting Link No. 10/S	Weight g
11-1 -	**A100 990 03P**	0,4	-	-
25-1 (04C-1)	**A100 996 03P**	0,6	-	-
35-1 (06C-1)	**A101 990 03P**	4	-	-
40-1 (08A-1)	**A105 990 03P**	7	-	-
50-1 (10A-1)	**A106 990 03P**	13	-	-
60-1 (12A-1)	**A107 990 03P**	21	-	-
80-1 (16A-1)	-	-	**A108 990 02P**	65

Double-Strand Roller Chains ANSI DIN ISO 606 (formerly DIN 8188), Premium

Materials: Special chain steels.

Premium duplex roller chains, developed for low wear. Produced in consistently high quality. From size 40 with seamless bushes. From size 80 with lube groove bushes. Waisted link plates. Dynamically prestretched. Chains are supplied with an uneven number of links, with inner links at both ends. Connecting links with ring coin plate for higher strength.

Temperature range: -10°C to +60°C.
Other temperatures are possible if special grease is used.

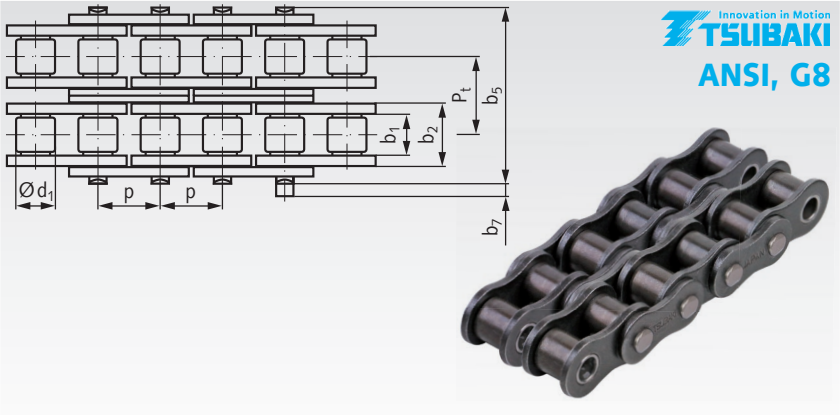

Ordering Details: e.g.: Product No. A12060000W, Double-Strand Roller Chain ANSI 25-2, Premium

ANSI / DIN ISO-No. (ASA)	Product No.	Pitch x Inner Width p x b_{1min} mm			p inch	Inner Width b_2 mm	Roller-Ø d_1 mm	Width b_5 mm	Transverse Pitch P_t mm	Projection b_7 mm	Breaking Load min. kN	Weight kg/m
25-2 [1] (04C-2)	**A120 600 00W** [1]	6,35	x	3,10	1/4	4,68	3,3	14,0	6,4	0,7	8,24	0,27
35-2 [1] (06C-2)	**A121 000 00W** [1]	9,525	x	4,68	3/8	7,28	5,08	21,6	10,1	1,1	19,6	0,69
40-2 (08A-2)	**A125 000 00W**	12,7	x	7,85	1/2	10,95	7,92	30,9	14,4	1,7	35,3	1,27
50-2 (10A-2)	**A126 000 00W**	15,875	x	9,40	5/8	13,53	10,16	38,7	18,1	1,8	56,9	2,07
60-2 (12A-2)	**A127 000 00W**	19,05	x	12,57	3/4	17,5	11,91	48,5	22,8	2	80,4	3,04
80-2 [2] (16A-2)	**A128 000 00W** [2]	25,4	x	15,75	1	22,6	15,88	61,8	29,3	3	143	5,27

[1] Bush chain (without rollers).
[2] With lubrication groove bushes.

Please note: Packing Unit 3.05m with 1 Connecting Link
If special lengths are needed, please tell us the length and the number of links (uneven number!). At all special lengths, connecting links have to be ordered separately.

Connecting Links for Double-Strand Roller Chains ANSI DIN ISO 606 (formerly DIN 8188), Premium

Materials: Special chain steels.

Ordering Details: e.g.: Product No. A12060300W, Connecting Link No. 11/E, ANSI 25-2, Premium

Innovation in Motion
TSUBAKI
ANSI, G8

No. 11/E: Connecting Link with Spring Clip

No. 10/S: Connecting Link with Cottered Pin

ANSI / DIN ISO No. (ASA)	Product No. Connecting Link No. 11/E	Weight g	Product No. Connecting Link No. 10/S	Weight g
25-2 (04C-2)	**A120 603 00W**	2	-	-
35-2 (06C-2)	**A121 003 00W**	7	-	-
40-2 (08A-2)	**A125 003 00W**	17	-	-
50-2 (10A-2)	**A126 003 00W**	24	-	-
60-2 (12A-2)	**A127 003 00W**	39	-	-
80-2 (16A-2)	-	-	**A128 002 00W**	122

Double-Strand Roller Chains similar to ANSI DIN ISO 606 (formerly DIN 8188), Stainless Steel, Premium

Material: Stainless steel, equivalent 1.4301 (AISI 304). Cold forged, with minimal magnetism.

STAINLESS

Premium duplex roller chains with high chemical resistance. Produced in consistently high quality. Main dimensions according to DIN. Due to the material properties, the transmittable power and breaking load are below the DIN values. The work load should not be higher than stated. Not lubricated. The chains must be lubricated according to the type of application. Waisted link plates (size 06 with straight link plates). Chains are supplied with an uneven number of links, with inner links at both ends.

Temperature range: -20°C to +400°C.

Ordering Details: e.g.: Product No. A12199000P, Double-Strand Roller Chain, ANSI 35-2, stainless, premium

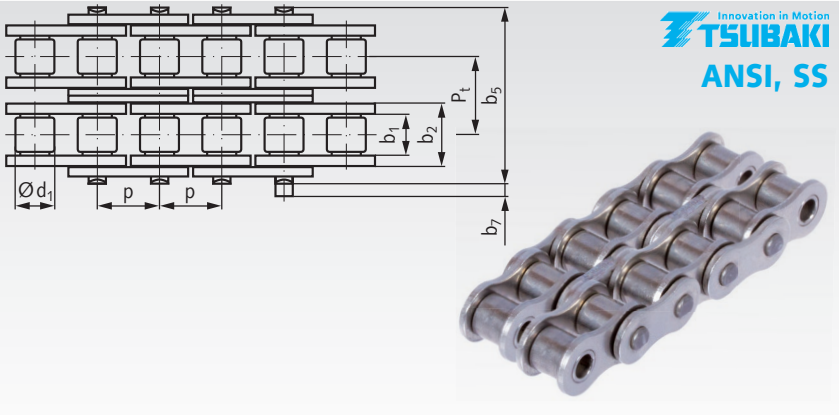

ANSI / DIN ISO-No. (ASA)	Product No.	Pitch x Inner Width p x b_{1min} mm			inch	Inner Width b_2 mm	Roller-Ø d_1 mm	Width b_5 mm	Transverse Pitch P_t mm	Projection b_7 mm	Work load max. kN	Weight kg/m
35-2 [1] (06C-2)	**A121 990 00P** [1]	9,525	x	4,68	3/8	7,28	5,08	22,3	10,1	0,7	0,53	0,69
40-2 (08A-2)	**A125 990 00P**	12,7	x	7,85	1/2	10,95	7,92	30,5	14,4	2,1	0,88	1,27
50-2 (10A-2)	**A126 990 00P**	15,875	x	9,40	5/8	13,53	10,16	38,3	18,1	2,1	1,37	2,07
60-2 (12A-2)	**A127 990 00P**	19,05	x	12,57	3/4	17,5	11,91	48,5	22,8	1,9	2,06	3,04
80-2 [2] (16A-2)	**A128 990 00P** [2]	25,4	x	15,75	1	22,28	15,88	61,8	29,3	3	3,53	5,30

[1] Bush chain (without rollers).
[2] Delivery only in whole packing units à 3.05m.

Please note: Packing Unit 3.05m with 1 Connecting Link
If special lengths are needed, please tell us the length and the number of links (uneven number!). At all special lengths, connecting links have to be ordered separately.

Connecting Links for Double-Strand Roller Chains similar to ANSI DIN ISO 606 (DIN 8188), Stainless Steel, Premium

Material: Stainless steel, equivalent 1.4301 (AISI 304). Cold forged, hardened pin, magnetic.

Details: e.g.: Product No. A12199003P, Connecting Link No. 11/E, ANSI 35-2, stainless steel, premium

STAINLESS

Innovation in Motion
TSUBAKI
ANSI, SS

No. 11/E: Connecting Link with Spring Clip

No. 10/S: Connecting Link with Cottered Pin

ANSI / DIN ISO No. (ASA)	Product No. Conn. Link No. 11/E	Weight g	Product No. Conn. Link No. 10/S	Weight g
35-2 (06C-2)	**A121 990 03P**	7	-	-
40-2 (08A-2)	**A125 990 03P**	17	-	-
50-2 (10A-2)	**A126 990 03P**	24	-	-
60-2 (12A-2)	**A127 990 03P**	39	-	-
80-2 (16A-2)	-	-	**A128 990 02P**	122

Sprockets KRS with One-Sided Hub, ANSI 25-1

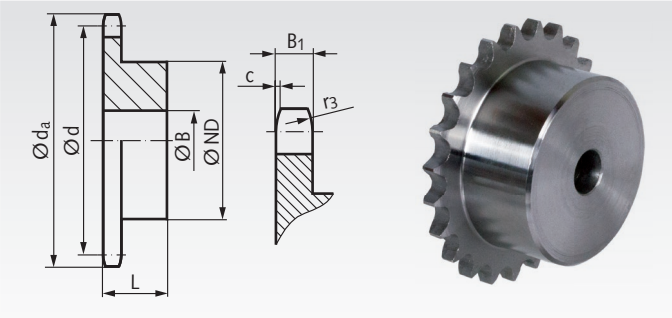

Material: Steel C45, not hardened.
Pre-bored.

Ordering Details: e.g.: Product No. A10060800, KRS, ANSI 25-1, 8 Teeth

ANSI 25-1 (ASA 04 C-1), Pitch 1/4"
B_1 = 2.9 mm, c = 0.7 mm, r_3 = 6.4 mm

Product No.	Number of teeth	d_a mm	d mm	ND mm	B mm	L mm	Weight g
A100 608 00	8	19,8	16,59	10	6	12	8
A100 609 00	9	21,8	18,57	11,5	6	12	11
A100 610 00	10	23,9	20,55	13	6	12	14
A100 611 00	11	25,9	22,54	15	8	13	17
A100 612 00	12	28,0	24,53	17	8	13	23
A100 613 00	13	30,0	26,53	17	8	13	25
A100 614 00	14	32,0	28,54	17	8	13	27
A100 615 00	15	34,0	30,54	20	8	13	36
A100 616 00	16	36,1	32,55	22	8	14	46
A100 618 00	18	40,1	36,57	25	8	14	60
A100 619 00	19	42,2	38,58	25	8	14	63
A100 620 00	20	44,2	40,59	25	8	14	66
A100 621 00	21	46,2	42,61	30	8	14	87
A100 622 00	22	48,2	44,62	30	8	14	90
A100 623 00	23	50,3	46,63	30	8	14	94
A100 624 00	24	52,3	48,65	30	8	14	97
A100 625 00	25	54,3	50,66	30	8	14	101
A100 626 00	26	56,3	52,68	30	8	16	115
A100 627 00	27	58,4	54,70	30	8	16	118
A100 628 00	28	60,4	56,71	30	8	16	122
A100 629 00	29	62,4	58,73	30	8	16	127
A100 630 00	30	64,4	60,75	30	8	16	131
A100 631 00	31	66,4	62,77	30	8	16	135
A100 632 00	32	68,5	64,78	30	8	16	140
A100 634 00	34	72,5	68,82	30	8	16	149
A100 635 00	35	74,5	70,84	30	8	16	154
A100 636 00	36	76,6	72,86	30	8	16	160
A100 637 00	37	78,6	74,88	30	8	16	165
A100 638 00	38	80,6	76,90	30	8	16	170
A100 639 00	39	82,6	78,91	30	8	16	176
A100 640 00	40	84,7	80,93	30	8	16	182

Reworking within 24h-service possible. Custom made parts on request.

Sprockets KRS with One-Sided Hub, ANSI 35-1

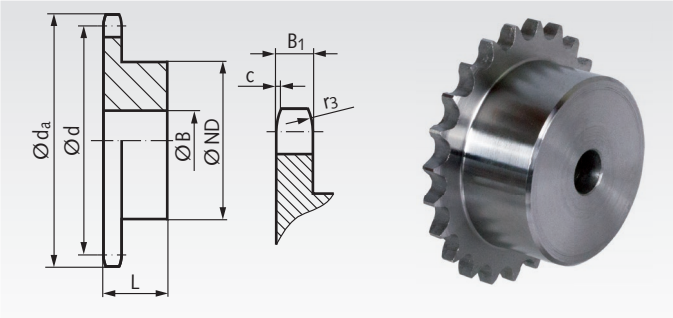

Material: Steel C45, not hardened.
Pre-bored.

Ordering Details: e.g.: Product No. A10111000, KRS, ANSI 35-1, 10 Teeth

ANSI 35-1 (ASA 06 C-1), Pitch 3/8"
B_1 = 4.4 mm, c = 1.2 mm, r_3 = 10 mm

Product No.	Number of teeth	d_a mm	d mm	ND mm	B mm	L mm	Weight g
A101 110 00	10	35,7	30,82	20	8	22	59
A101 111 00	11	38,8	33,81	22	8	25	81
A101 112 00	12	41,8	36,80	25	8	25	104
A101 113 00	13	44,9	39,80	28	10	25	125
A101 114 00	14	47,9	42,80	31	10	25	153
A101 115 00	15	50,9	45,81	34	10	25	185
A101 116 00	16	54,0	48,82	38	10	28	254
A101 117 00	17	57,0	51,84	38	10	28	262
A101 118 00	18	60,1	54,85	38	10	28	270
A101 119 00	19	63,1	57,87	46	10	28	376
A101 120 00	20	66,1	60,89	46	10	28	386
A101 121 00	21	69,2	63,91	46	12	28	388
A101 122 00	22	72,2	66,93	52	12	28	484
A101 123 00	23	75,3	69,95	52	12	28	495
A101 124 00	24	78,3	72,97	52	12	28	506
A101 125 00	25	81,3	76,00	58	12	28	614
A101 126 00	26	84,4	79,02	58	12	28	627
A101 127 00	27	87,4	82,05	58	12	28	640
A101 128 00	28	90,4	85,07	60	12	28	687
A101 130 00	30	96,5	91,12	60	12	28	716

Plate Wheels KRL, ANSI 35-1

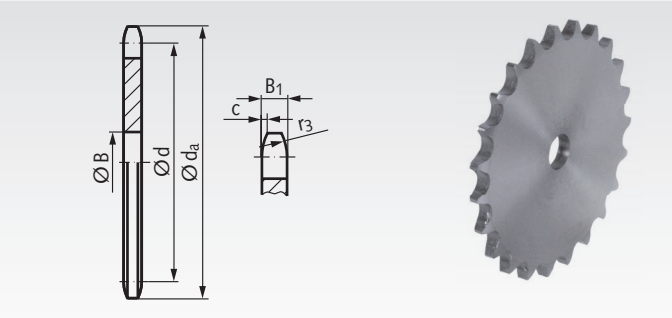

Material: Low-carbon steel, not hardable.
Pre-bored.

Ordering Details: e.g.: Product No. A10123000, KRL, ANSI 35-1, 30 Teeth

ANSI 35-1 (ASA 06 C-1), Pitch 3/8"
B_1 = 4.4 mm, c = 1.2 mm, r_3 = 10 mm

Product No.	Number of teeth	d_a mm	d mm	B mm	Weight g
A101 230 00	30	96,5	91,12	12	217
A101 232 00	32	102,6	97,18	12	248
A101 235 00	35	111,7	106,26	12	298
A101 236 00	36	114,7	109,29	12	315
A101 238 00	38	120,8	115,34	12	352
A101 240 00	40	126,8	121,40	12	391
A101 242 00	42	132,9	127,46	12	431
A101 248 00	48	151,1	145,64	16	562
A101 257 00	57	178,4	172,91	16	796

Reworking within 24h-service possible. Custom made parts on request.

Sprockets KRS with One-Sided Hub, ANSI 40-1

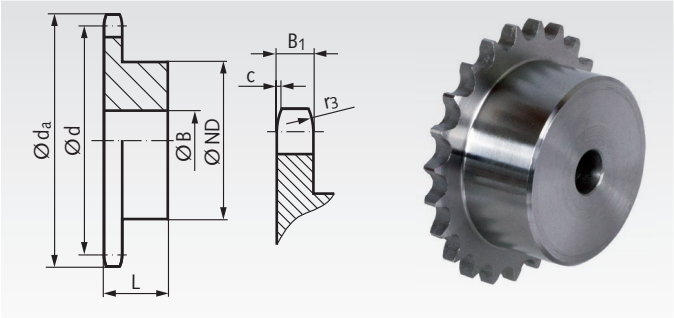

Material: Steel C45, not hardened.
Pre-bored.

Ordering Details: e.g.: Product No. A10511000, KRS, ANSI 40-1, 10 Teeth

ANSI 40-1 (ASA 08 A-1), Pitch 1/2"
B_1 = 7.4 mm, c = 1.6 mm, r_3 = 13.5 mm

Product No.	Number of teeth	d_a mm	d mm	ND mm	B mm	L mm	Weight g
A105 110 00	10	46,4	41,10	26	10	25	125
A105 111 00	11	50,5	45,08	29	10	25	157
A105 112 00	12	54,6	49,07	35	10	28	236
A105 113 00	13	58,7	53,07	35	10	28	253
A105 114 00	14	62,7	57,07	35	10	28	272
A105 115 00	15	66,8	61,08	48	10	28	428
A105 116 00	16	70,8	65,10	48	10	28	450
A105 117 00	17	74,9	69,12	48	10	28	475
A105 118 00	18	78,9	73,14	60	12	28	656
A105 119 00	19	83,0	77,16	60	12	28	682
A105 120 00	20	87,0	81,18	60	12	28	710
A105 121 00	21	91,1	85,21	65	12	28	819
A105 122 00	22	95,1	89,24	65	12	28	850
A105 123 00	23	99,2	93,27	65	12	28	882
A105 124 00	24	103,2	97,30	70	14	28	992
A105 125 00	25	107,3	101,33	70	14	28	1028
A105 126 00	26	111,3	105,36	70	14	28	1065
A105 128 00	28	119,4	113,43	70	16	30	1190
A105 130 00	30	127,5	121,50	80	16	30	1482
A105 132 00	32	135,6	129,57	80	16	30	1572
A105 135 00	35	147,8	141,68	90	16	30	1954
A105 136 00	36	151,8	145,72	90	16	30	2006
A105 138 00	38	159,9	153,79	90	16	35	2354
A105 140 00	40	168,0	161,87	90	16	35	2469

Plate Wheels KRL, ANSI 40-1

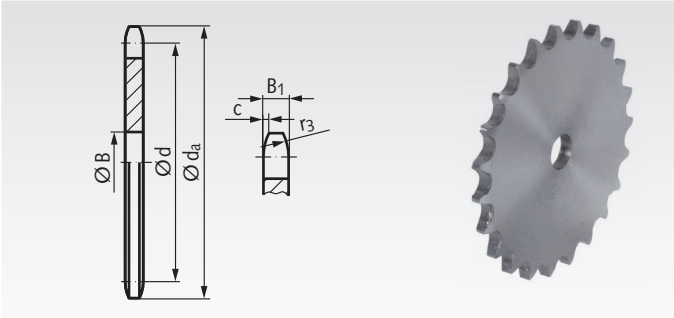

Material: Low-carbon steel, not hardable.
Pre-bored.

Ordering Details: e.g.: Product No. A10523800, KRL, ANSI 40-1, 38 Teeth

ANSI 40-1 (ASA 08 A-1), Pitch 1/2"
B_1 = 7.4 mm, c = 1.6 mm, r_3 = 13.5 mm

Product No.	Number of teeth	d_a mm	d mm	B mm	Weight g
A105 238 00	38	159,9	153,79	16	1032
A105 242 00	42	176,1	169,94	20	1260
A105 245 00	45	188,2	182,06	20	1452
A105 248 00	48	200,3	194,18	20	1656
A105 250 00	50	208,5	202,26	20	1801
A105 257 00	57	236,7	230,54	20	2353
A105 272 00	72	297,4	291,15	20	3781

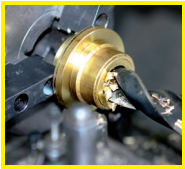

Reworking within 24h-service possible. Custom made parts on request.

Sprockets KRS with One-Sided Hub, ANSI 50-1

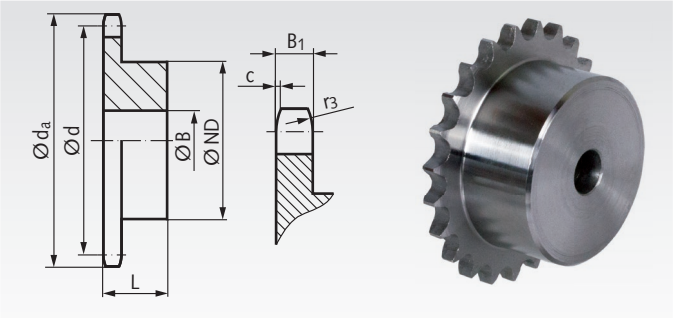

Material: Steel C45, not hardened.
Pre-bored.

Ordering Details: e.g.: Product No. A10610900, KRS, ANSI 50-1, 9 Teeth

ANSI 50-1 (ASA 10 A-1), Pitch 5/8"
B_1 = 9.0 mm, c = 2.0 mm, r_3 = 17 mm

Product No.	Number of teeth	d_a mm	d mm	ND mm	B mm	L mm	Weight kg
A106 109 00	9	52,7	46,42	30	10	25	0,174
A106 110 00	10	57,8	51,37	35	10	25	0,230
A106 111 00	11	62,9	56,35	37	12	30	0,303
A106 112 00	12	68,0	61,34	42	12	30	0,384
A106 113 00	13	73,1	66,33	47	12	30	0,474
A106 114 00	14	78,1	71,34	52	12	30	0,574
A106 115 00	15	83,2	76,35	57	12	30	0,682
A106 116 00	16	88,3	81,37	60	12	30	0,770
A106 117 00	17	93,3	86,39	60	12	30	0,814
A106 118 00	18	98,4	91,42	70	14	30	1,02
A106 119 00	19	103,5	96,45	70	14	30	1,07
A106 120 00	20	108,6	101,48	75	14	30	1,22
A106 121 00	21	113,6	106,51	75	16	30	1,26
A106 122 00	22	118,7	111,55	80	16	30	1,42
A106 124 00	24	128,8	121,62	80	16	30	1,55
A106 125 00	25	133,9	126,66	80	16	30	1,61
A106 126 00	26	138,9	131,70	85	20	35	1,97
A106 127 00	27	144,0	136,74	85	20	35	2,05
A106 128 00	28	149,0	141,79	90	20	35	2,26
A106 130 00	30	159,1	151,87	90	20	35	2,42
A106 132 00	32	169,3	161,96	95	20	35	2,74
A106 133 00	33	174,3	167,01	95	20	35	2,83
A106 134 00	34	179,4	172,05	95	20	35	2,92
A106 135 00	35	184,4	177,10	95	20	35	3,02
A106 136 00	36	189,5	182,15	100	20	35	3,27
A106 138 00	38	199,6	192,24	100	20	35	3,48
A106 140 00	40	209,7	202,33	100	20	35	3,69

Use of alternative Sprockets 10 B-1

Chains ANSI 50 (ASA 10 A-1) have identical roller diameters 10.16 mm like chains 10 B-1, but the width is a little bit different. At sprockets 10 B-1, the tooth width is 0.1mm larger and the chamfers are a little bit smaller. At the most common mounting position (chain lines horizontal or slightly inclined and chain rollers horizontal), sprockets 10 B-1 can be used with ANSI chains 50-1 (ASA 10 A-1) without reworking the teeth. This is often done, but does not comply with the requirements of DIN ISO 606. So it is the responsibility of the user.

In the MAEDLER assortment, there are sprockets 10 B-1 in many designs. From stainless steel: KRR with hub. From steel: KRF, hardened, ready-to-mount with custom bore and keyway and setscrew threads; KRT for taper bush; KRTG, hardened for taper bush; KRG hardened, with hub; KRS with hub and plate wheels KRL without hub.

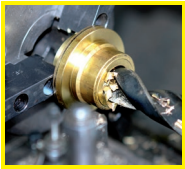

Reworking within 24h-service possible. Custom made parts on request.

Sprockets KRS with One-Sided Hub, ANSI 60-1

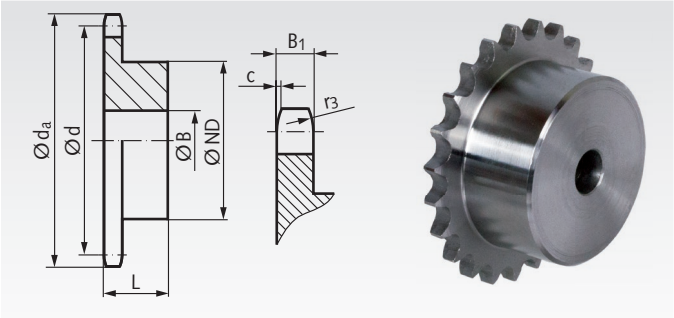

Material: Steel C45, not hardened.
Pre-bored.

Ordering Details: e.g.: Product No. A10711000, KRS, ANSI 60-1, 10 Teeth

ANSI 60-1 (ASA 12 A-1), Pitch 3/4"
B_1 = 12 mm, c = 2.4 mm, r_3 = 20 mm

Product No.	Number of teeth	d_a mm	d mm	ND mm	B mm	L mm	Weight kg
A107 110 00	10	69,6	61,65	42	12	30	0,413
A107 111 00	11	75,8	67,62	45	12	30	0,495
A107 112 00	12	81,9	73,60	45	12	30	0,555
A107 113 00	13	88,0	79,60	60	14	35	0,886
A107 114 00	14	94,0	85,61	60	14	35	0,955
A107 115 00	15	100,1	91,63	60	14	35	1,03
A107 116 00	16	106,2	97,65	75	16	35	1,38
A107 117 00	17	112,3	103,67	75	16	35	1,47
A107 118 00	18	118,4	109,70	75	16	35	1,56
A107 119 00	19	124,5	115,74	80	16	35	1,77
A107 120 00	20	130,5	121,78	80	16	35	1,87
A107 121 00	21	136,6	127,82	80	16	35	1,98
A107 122 00	22	142,7	133,86	90	20	40	2,54
A107 123 00	23	148,8	139,90	90	20	40	2,66
A107 124 00	24	154,8	145,95	90	20	40	2,78
A107 125 00	25	160,9	151,99	90	20	40	2,91
A107 126 00	26	167,0	158,04	90	20	40	3,05
A107 127 00	27	173,0	164,09	90	20	40	3,19
A107 128 00	28	179,1	170,14	95	20	40	3,49
A107 130 00	30	191,3	182,25	95	20	40	3,80

Plate Wheels KRL, ANSI 60-1

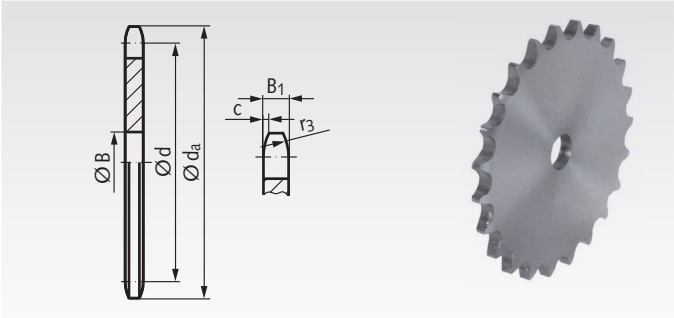

Material: Low-carbon steel, not hardable.
Pre-bored.

Ordering Details: e.g.: Product No. A10723800, KRL, ANSI 60-1, 38 Teeth

ANSI 60-1 (ASA 12 A-1), Pitch 3/4"
B_1 = 12 mm, c = 2.4 mm, r_3 = 20 mm

Product No.	Number of teeth	d_a mm	d mm	B mm	Weight kg
A107 238 00	38	239,8	230,69	20	3,78
A107 240 00	40	251,9	242,80	20	4,19
A107 242 00	42	264,1	254,92	25	4,62
A107 248 00	48	300,5	291,27	25	6,06
A107 257 00	57	355,1	345,81	25	8,60

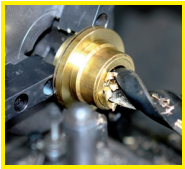

Reworking within 24h-service possible. Custom made parts on request.

Sprockets KRS with One-Sided Hub, ANSI 80-1

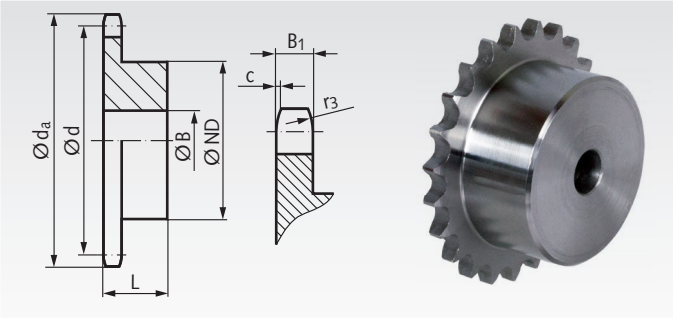

Material: Steel C45, not hardened.
Pre-bored.

Ordering Details: e.g.: Product No. A10811000, KRS, ANSI 80-1, 10 Teeth

ANSI 80-1 (ASA 16 A-1), Pitch 1"
B_1 = 15 mm, c = 3.2 mm, r_3 = 27 mm

Product No.	Number of teeth	d_a mm	d mm	ND mm	B mm	L mm	Weight kg
A108 110 00	10	92,9	82,20	55	16	35	0,861
A108 111 00	11	101,0	90,16	61	16	40	1,17
A108 112 00	12	109,1	98,14	69	16	40	1,46
A108 113 00	13	117,3	106,14	78	16	40	1,80
A108 114 00	14	125,4	114,15	84	16	40	2,11
A108 115 00	15	133,5	122,17	92	16	40	2,49
A108 116 00	16	141,6	130,20	100	20	45	3,16
A108 117 00	17	149,7	138,23	100	20	45	3,35
A108 118 00	18	157,8	146,27	100	20	45	3,56
A108 119 00	19	165,9	154,32	100	20	45	3,78
A108 120 00	20	174,0	162,37	100	20	45	4,01
A108 121 00	21	182,1	170,42	110	20	50	4,99
A108 122 00	22	190,2	178,48	110	20	50	5,24
A108 123 00	23	198,3	186,54	110	20	50	5,51
A108 124 00	24	206,4	194,60	110	20	50	5,78
A108 125 00	25	214,5	202,66	110	20	50	6,07
A108 128 00	28	238,8	226,86	120	20	50	7,50
A108 130 00	30	255,0	243,00	120	20	50	8,19

Plate Wheels KRL, ANSI 80-1

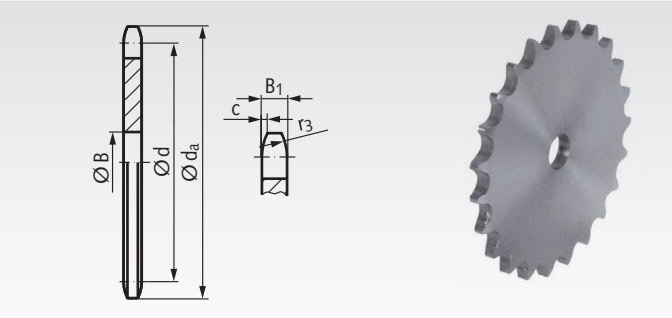

Material: Low-carbon steel, not hardable.
Pre-bored.

Ordering Details: e.g.: Product No. A10821100, KRL, ANSI 80-1, 11 Teeth

ANSI 80-1 (ASA 16 A-1), Pitch 1"
B_1 = 15 mm, c = 3.2 mm, r_3 = 27 mm

Product No.	Number of teeth	d_a mm	d mm	B mm	Weight kg
A108 211 00	11	101,0	90,16	15	0,643
A108 214 00	14	125,4	114,15	15	1,07
A108 215 00	15	133,5	122,17	15	1,24
A108 216 00	16	141,6	130,20	19	1,41
A108 218 00	18	157,8	146,27	19	1,80
A108 220 00	20	174,0	162,37	19	2,24
A108 224 00	24	206,4	194,60	20	3,27
A108 230 00	30	255,0	243,00	20	5,19

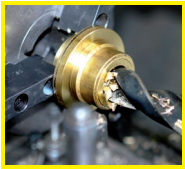

Reworking within 24h-service possible. Custom made parts on request.

Double-Strand Sprockets ZRS with One-Sided Hub, ANSI 35-2

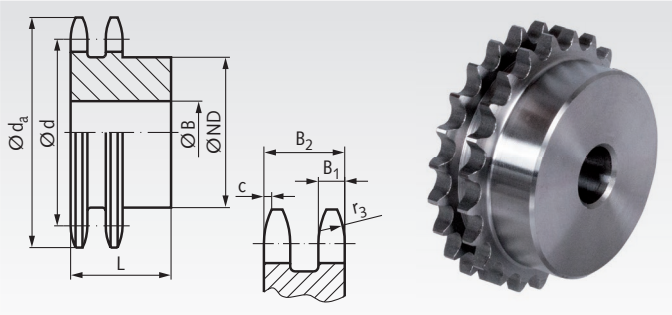

Material: Steel C45, not hardened.
Pre-bored.

Ordering Details: e.g.: Product No. A12111300, ZRS, ANSI 35-2, 13 Teeth

ANSI 35-2 (ASA 06 C-2), Pitch 3/8“
B_1 = 4.3 mm, B_2 = 14.4 mm, c = 1.2 mm, r_3 = 10 mm

Product No.	Number of teeth	d_a mm	d mm	ND mm	B mm	L mm	Weight g
A121 113 00	13	44,9	39,80	28	10	25	144
A121 114 00	14	47,9	42,80	31	10	25	174
A121 116 00	16	54,0	48,82	37	12	30	275
A121 117 00	17	57,0	51,84	40	12	30	321
A121 119 00	19	63,1	57,87	46	12	30	423
A121 120 00	20	66,1	60,89	49	12	30	479
A121 121 00	21	69,2	63,91	52	16	30	518
A121 122 00	22	72,2	66,93	55	16	30	580
A121 124 00	24	78,3	72,97	61	16	30	715
A121 125 00	25	81,3	76,00	64	16	30	788

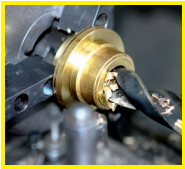

Reworking within 24h-service possible. Custom made parts on request.

Double-Strand Sprockets ZRS with One-Sided Hub, ANSI 40-2

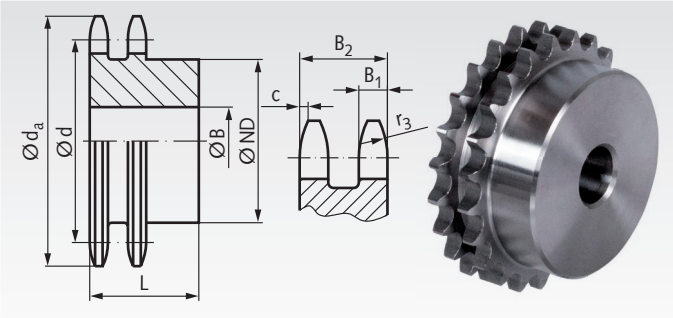

Material: Steel C45, not hardened.
Pre-bored.

Ordering Details: e.g.: Product No. A12511000, ZRS, ANSI 40-2, 10 Teeth

ANSI 40-2 (ASA 08 A-2), Pitch 1/2"
B_1 = 7.2 mm, B_2 = 21.6 mm, c = 1.6 mm, r_3 = 13.5 mm

Product No.	Number of teeth	d_a mm	d mm	ND mm	B mm	L mm	Weight kg
A125 110 00	10	46,4	41,10	28	10	32	0,190
A125 111 00	11	50,5	45,08	32	12	35	0,276
A125 113 00	13	58,7	53,07	38	12	35	0,373
A125 114 00	14	62,7	57,07	42	12	35	0,451
A125 115 00	15	66,8	61,08	46	12	35	0,535
A125 116 00	16	70,8	65,10	50	14	35	0,615
A125 117 00	17	74,9	69,12	54	14	35	0,714
A125 118 00	18	78,9	73,14	58	14	35	0,819
A125 120 00	20	87,0	81,18	66	14	35	1,06
A125 121 00	21	91,1	85,21	70	16	40	1,31
A125 122 00	22	95,1	89,24	70	16	40	1,40
A125 123 00	23	99,2	93,27	70	16	40	1,49
A125 124 00	24	103,2	97,30	75	16	40	1,66
A125 125 00	25	107,3	101,33	80	16	40	1,85
A125 126 00	26	111,3	105,36	85	20	40	2,01
A125 127 00	27	115,4	109,40	85	20	40	2,12
A125 128 00	28	119,4	113,43	90	20	40	2,33
A125 130 00	30	127,5	121,50	100	20	40	2,78
A125 135 00	35	147,8	141,68	100	20	40	3,46
A125 138 00	38	159,9	153,79	100	20	40	4,14

Double-Strand Plate Wheels ZRL, ANSI 40-2

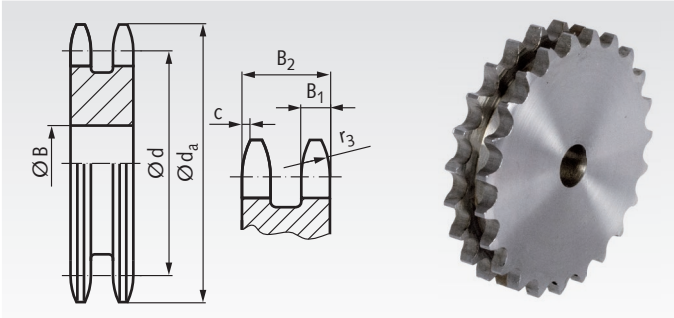

Material: Low-carbon steel, not hardable.
Pre-bored.

Ordering Details: e.g.: Product No. A12525700, ZRL, ANSI 40-2, 57 Teeth

ANSI 40-2 (ASA 08 A-2), Pitch 1/2"
B_1 = 7.2 mm, B_2 = 21.6 mm, c = 1.6 mm, r_3 = 13.5 mm

Product No.	Number of teeth	d_a mm	d mm	B mm	Weight kg
A125 257 00	57	236,7	230,54	25	6,59
A125 276 00	76	313,6	307,32	25	11,92
A125 283 00	95	390,4	384,11	25	18,84

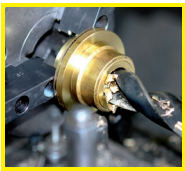

Reworking within 24h-service possible. Custom made parts on request.

Double-Strand Sprockets ZRS with One-Sided Hub, ANSI 50-2

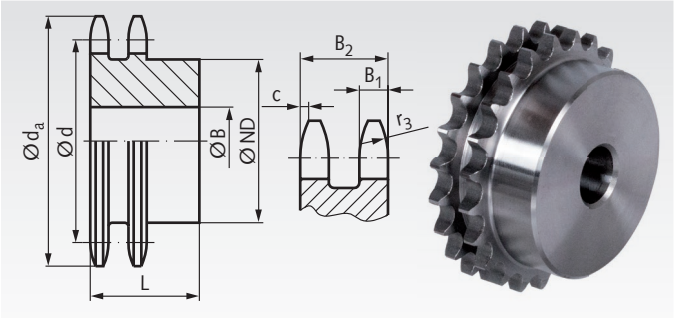

Material: Steel C45, not hardened.
Pre-bored.

Ordering Details: e.g.: Product No. 12611300, ZRS, ANSI 50-2, 13 Teeth

ANSI 50-2 (ASA 10 A-2), Pitch 5/8"
B_1 = 8.8 mm, B_2 = 26.9 mm, c = 2.0 mm, r_3 = 17 mm

Product No.	Number of teeth	d_a mm	d mm	ND mm	B mm	L mm	Weight kg
A126 113 00	13	73,1	66,33	49	14	40	0,711
A126 114 00	14	78,1	71,34	54	14	40	0,853
A126 115 00	15	83,2	76,35	59	14	40	1,01
A126 116 00	16	88,3	81,37	64	16	45	1,28
A126 117 00	17	93,3	86,39	69	16	45	1,48
A126 118 00	18	98,4	91,42	74	16	45	1,69
A126 119 00	19	103,5	96,45	79	16	45	1,92
A126 120 00	20	108,6	101,48	84	16	45	2,16
A126 121 00	21	113,6	106,51	85	16	45	2,34
A126 122 00	22	118,7	111,55	90	16	45	2,60
A126 123 00	23	123,7	116,59	95	16	45	2,88
A126 124 00	24	128,8	121,62	100	16	45	3,17
A126 125 00	25	133,9	126,66	105	16	45	3,48

Double-Strand Plate Wheels ZRL, ANSI 50-2

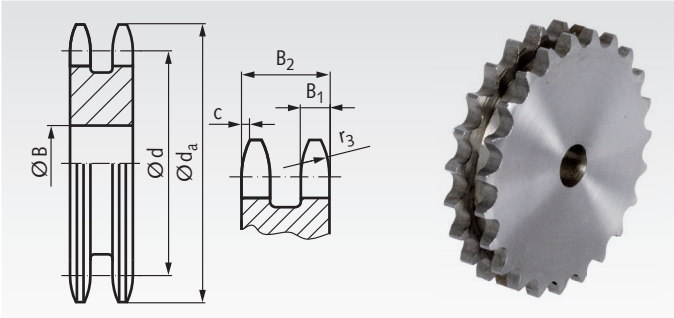

Material: Low-carbon steel, not hardable.
Pre-bored.

Ordering Details: e.g.: Product No. A12623800, ZRL, ANSI 50-2, 38 Teeth

ANSI 50-2 (ASA 10 A-2), Pitch 5/8"
B_1 = 8.8 mm, B_2 = 26.9 mm, c = 2.0 mm, r_3 = 17 mm

Product No.	Number of teeth	d_a mm	d mm	B mm	Weight kg
A126 238 00	38	199,6	192,24	20	5,56
A126 245 00	45	235,0	227,58	20	7,91
A126 257 00	57	295,7	288,18	25	12,89
A126 276 00	76	391,7	384,15	25	23,27

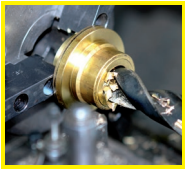

Reworking within 24h-service possible. Custom made parts on request.

Double-Strand Sprockets ZRS with One-Sided Hub, ANSI 60-2

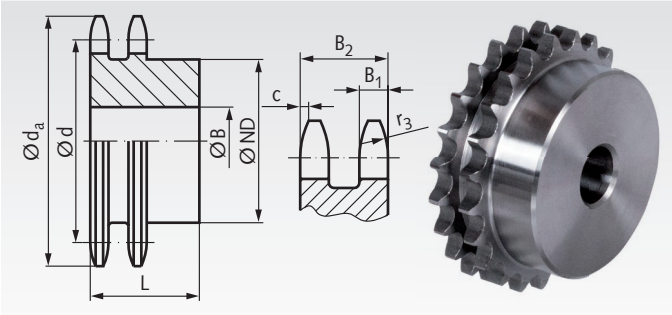

Material: Steel C45, not hardened.
Pre-bored.

Ordering Details: e.g.: Product No. A12711000, ZRS, ANSI 60-2, 10 Teeth

ANSI 60-2 (ASA 12 A-2), Pitch 3/4“
B_1 = 11.8 mm, B_2 = 34.6 mm, c = 12.4 mm, r_3 = 20 mm

Product No.	Number of teeth	d_a mm	d mm	ND mm	B mm	L mm	Weight kg
A127 110 00	10	69,6	61,65	42	12	45	0,669
A127 111 00	11	75,8	67,62	47	16	50	0,867
A127 112 00	12	81,9	73,60	53	16	50	1,08
A127 113 00	13	88,0	79,60	59	16	50	1,31
A127 114 00	14	94,0	85,61	65	16	50	1,57
A127 115 00	15	100,1	91,63	71	16	50	1,85
A127 116 00	16	106,2	97,65	77	20	50	2,11
A127 117 00	17	112,3	103,67	83	20	50	2,44
A127 118 00	18	118,4	109,70	89	20	50	2,78
A127 119 00	19	124,5	115,74	95	20	50	3,15
A127 120 00	20	130,5	121,78	100	20	50	3,53
A127 121 00	21	136,6	127,82	100	20	50	3,82
A127 122 00	22	142,7	133,86	100	20	50	4,14
A127 123 00	23	148,8	139,90	110	20	50	4,66
A127 124 00	24	154,8	145,95	110	20	50	5,00
A127 125 00	25	160,9	151,99	120	20	50	5,58
A127 126 00	26	167,0	158,04	120	20	50	5,95
A127 127 00	27	173,0	164,09	120	20	50	6,34
A127 128 00	28	179,1	170,14	120	20	50	6,75
A127 130 00	30	191,3	182,25	120	20	50	7,63

Double-Strand Sprockets ZRS with One-Sided Hub, ANSI 80-2

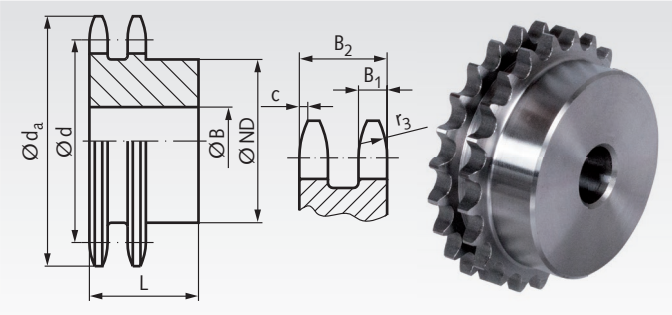

Material: Steel C45, not hardened.
Pre-bored.

Ordering Details: e.g.: Product No. A12811200, ZRS, ANSI 80-2, 12 Teeth

ANSI 80-2 (ASA 16 A-2), Pitch 1“
B_1 = 14.7 mm, B_2 = 44 mm, c = 3.2 mm, r_3 = 27 mm

Product No.	Number of teeth	d_a mm	d mm	ND mm	B mm	L mm	Weight kg
A128 112 00	12	109,1	98,14	72	20	70	2,69
A128 113 00	13	117,3	106,14	78	20	70	3,22
A128 114 00	14	125,4	114,15	86	20	70	3,86
A128 115 00	15	133,5	122,17	94	20	70	4,55
A128 116 00	16	141,6	130,20	102	20	70	5,30
A128 118 00	18	157,8	146,27	118	20	70	6,95
A128 119 00	19	165,9	154,32	126	20	70	7,87
A128 120 00	20	174,0	162,37	130	20	70	8,67
A128 121 00	21	182,1	170,42	130	25	70	9,24

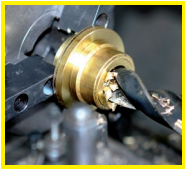

Reworking within 24h-service possible. Custom made parts on request.

www.maedler.de

...the entire MÄDLER® range with CAD files on the Internet

We present the entire ***MÄDLER®*** range with CAD files and ***MÄDLER®*** info, continuously updated, on the internet.

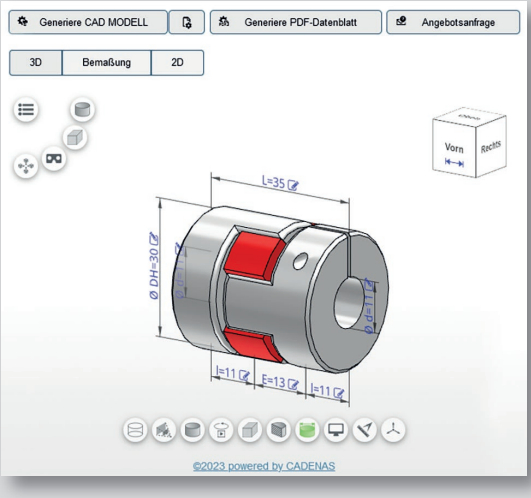

Fast access to the data, fast ordering by internet.

Orders by internet, phone, fax or e-mail:
We guarantee delivery at short notice.

www.maedler.de

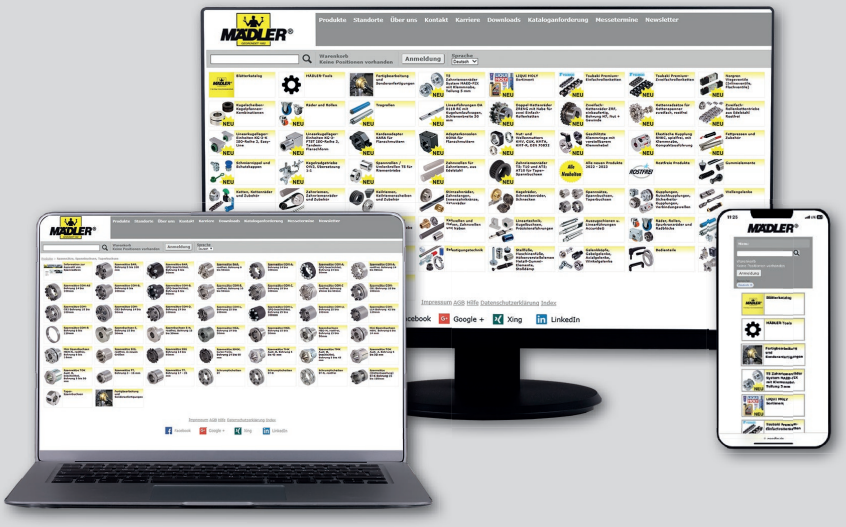

Dimensions and other information in this catalogue display the current state of technology. We reserve the right for changes.
This catalogue was created with due diligence, but errors might still occur. We refuse to accept any claims in this respect. We reserve the right to alter dimensions, and to change or remove single products and product groups without prior notice. Our general conditions of sales, delivery and payment can be found on the last page of this catalogue.

www.maedler.de *...we keep things moving*

Imprint

Publisher: MÄDLER GmbH Tränkestr. 6-8 D-70597 Stuttgart Tel. +49 711 720950 Fax +49 711 7209533 e-mail stuttgart@maedler.de
Commercial register: HRB Stuttgart 6889. D-U-N-S Nr.: 31-950-5848. Managing directors: Mrs. Antje Michel, Mr. Steffen Krotz.
Catalogue creation and technical documentation: Mr. Dipl.-Ing. Knut Schmidt (head), Mr. Pascal Schmitz, M.Sc., Mr. Dirk Stangenberg.
The original language is German. Print mistakes, errors and translation mistakes might occur.
The reprint of our catalogues or use of our texts, photos or drawings requires the explicit written approval of MÄDLER GmbH in Stuttgart.

MÄDLER®, MÄDLER®, MAED-FIX®, MAED-FLEX® and MAEPEX® are registered and protected trademarks in many countries.

MÄDLER® - your expert for power transmission elements.
Discover our wide range:

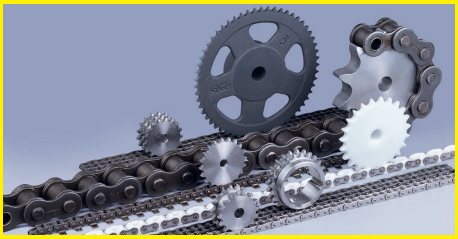
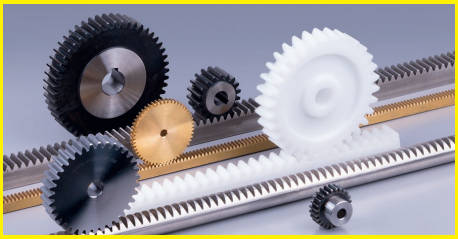
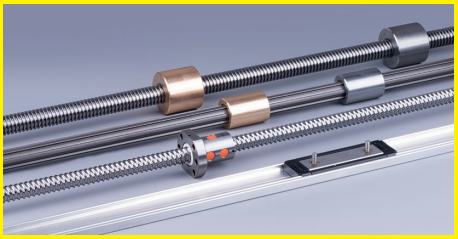

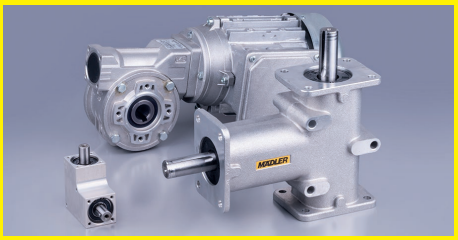

Standard program:
Toothed parts such as gears, racks, bevel gears, pulleys, sprockets. Locking assemblies, lead screws and nuts, splined shafts and hubs, linear motion, rolling bearings, standard parts, couplings, gearboxes and geared motors, pneumatic elements, telescopic slides.

Special parts:
Transmission parts according to customer samples or drawings, from single parts to large series and ready-to-install assemblies - short delivery times, competitive prices and perfect quality.

Please visit our webshop at www.maedler.de

> Availability of more than 38,000 power transmission products 24/7.

> Download of CAD models in 3D.

> Download of PDF catalogues in six different languages.

> MÄDLER® tools: our added value for you with selection and calculation tools.

> A lot of documentations and information for technical calculation.

+++ MÄDLER® newsletter+++
You want to be informed regularly about our new products and services? Please subscribe at www.maedler.de!

Our MÄDLER® - Catalogue 43:

1064 pages with detailed information about our products.
Available in the following languages: English, French, Chinese, Polish, Slovak and German.
Request for free now at www.maedler.de

Follow us:

MAEDLER GmbH • Traenkestrasse 6-8 • D-70597 Stuttgart • Germany
Phone: +49 711 720 95 885 • Fax: +49 711 720 95 33 • export@maedler.de

EN 02/2025